Compact Light Curtain Type 4
SF4B-C SERIES

Related Information
- General terms and conditions..... F-7
- **SF-C10** ..... P.703~
- General precautions ..... P.1458~
- Sensor selection guide ..... P.497~
- Glossary of terms..... P.1455~
- Korea's S-mark..... P.1506

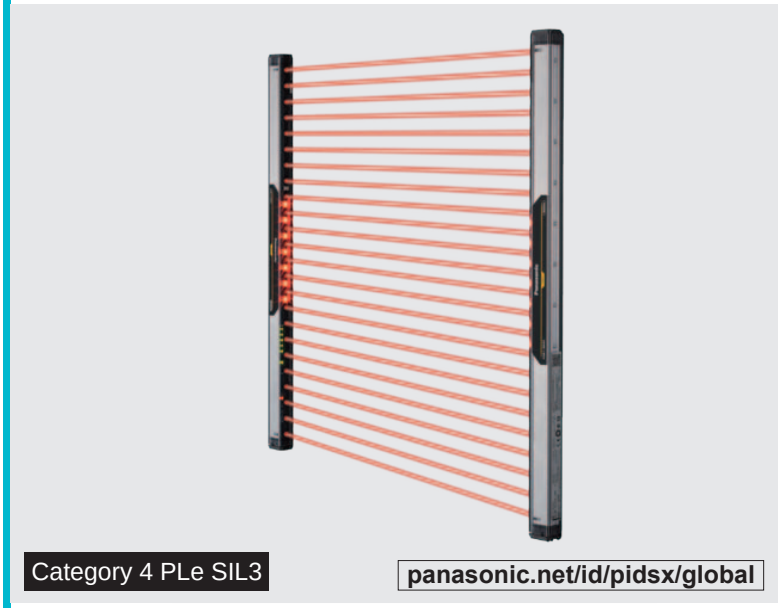

Conforming to Machine & EMC Directive

Certified

Certified by NRTL

Conforming to OSHA / ANSI

Certified

Self-diagnosis | Test input | PNP output type available

Compact, light weight design, and advanced functionality in one package

Compact profile design, maximize the machinery opening area

The **SF4B-C** series is designed to fit onto an aluminum frame, maximizing the machinery opening area. It can even allow zero dead zone.

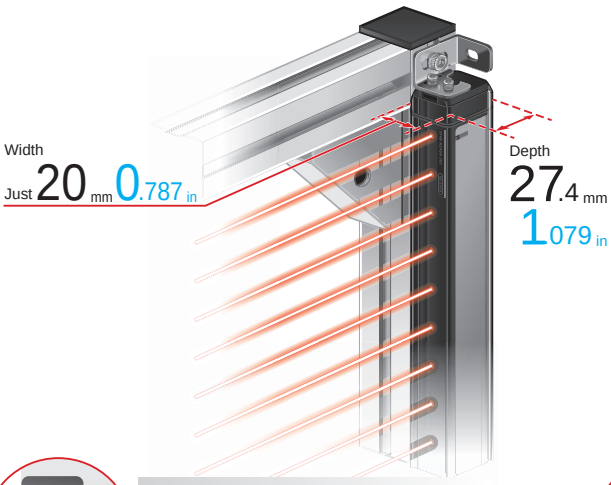

Side mounting

- The presence of light curtain does not narrow the opening area.
- The light curtain is thin, so its bulge from frame can be minimized.

* When using standard mounting brackets (optional)

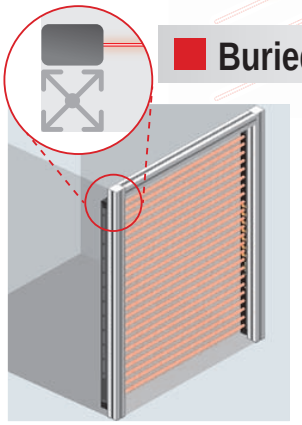

Buried mounting (side)

- The light curtain fits onto frame perfectly, even in embedded installations.
- The light curtain protrudes neither into the machinery opening nor outside the frame.
- The light curtain will not be damaged due to collision with workpiece.

* When using standard mounting brackets (optional)

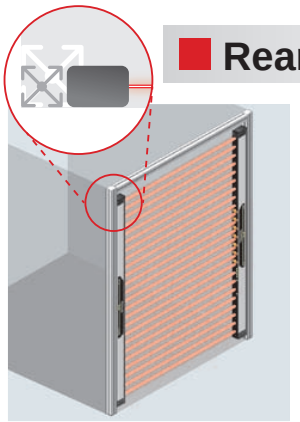

Rear mounting

- The light curtain fits onto a 20 × 20 mm 0.787 × 0.787 in aluminum frame perfectly.
- The light curtain does not protrude from the frame.

* When using standard mounting brackets (optional)

FIBER SENSORS
LASER SENSORS
PHOTOELECTRIC SENSORS
MICRO PHOTOELECTRIC SENSORS
AREA SENSORS
LIGHT CURTAINS / SAFETY COMPONENTS
PRESSURE / FLOW SENSORS
INDUCTIVE PROXIMITY SENSORS
PARTICULAR USE SENSORS
SENSOR OPTIONS
SIMPLE WIRE-SAVING UNITS
WIRE-SAVING SYSTEMS
MEASUREMENT SENSORS
STATIC ELECTRICITY PREVENTION DEVICES
LASER MARKERS
PLC
HUMAN MACHINE INTERFACES
ENERGY CONSUMPTION VISUALIZATION COMPONENTS
FA COMPONENTS
MACHINE VISION SYSTEMS
UV CURING SYSTEMS

Selection Guide
Light Curtains
Safety Components
Optical Touch Switch
Control Units
Definition of Sensing Heights

SF4B-C
SF4C
SF2C
SF4B
SF2B
BSF4-AH80

Plastic × metal

The **SF4B-C** series features a proprietary double structure of a “plastic body” with a “metal inner frame” which lightens the weight while maintaining the durability.

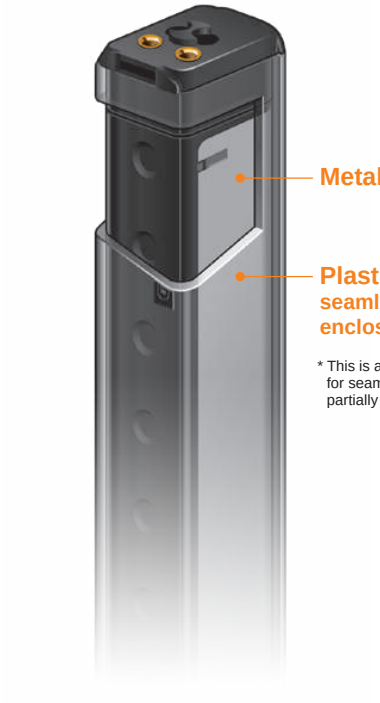

* This is an only image for seamless enclosure partially cut.

Maximum protection height of 1,943.4 mm 76.512 in

Despite its compact, plastic body, the **SF4B-C** series features a metal inner frame that increases toughness and also keeps its enclosure not to curve.
Protective heights range from 263.4 mm to 1,943.4 mm 10.370 in to 76.512 in.

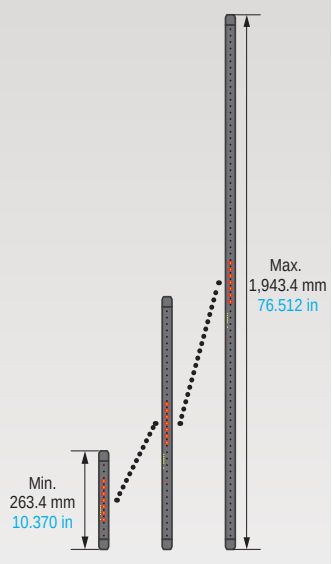

45% lighter* for easy installation in high places and when mounting long models

Thanks to its plastic body, the **SF4B-C** series is 45% lighter* than previous models with aluminum enclosures. This helps to reduce the overall weight of the equipment during transport and when shipping it overseas.

* Comparing **SF4B-H80** <**V2**> with **SF4B-H80CA-J05**

Large multi-purpose indicator

SF4B-□CA-J05

The **SF4B-C** series incorporates a large multi-purpose indicator (orange) positioned around workers’ eye level. The indicator shows the presence of the light curtain, helping to prevent unintentional beam interruption. The indicator can be used in a variety of applications such as a muting indicator and work indicator.

Exceptional visibility with wide angle

The large multi-purpose indicator shines brightly through the plastic body to ensure exceptional visibility.

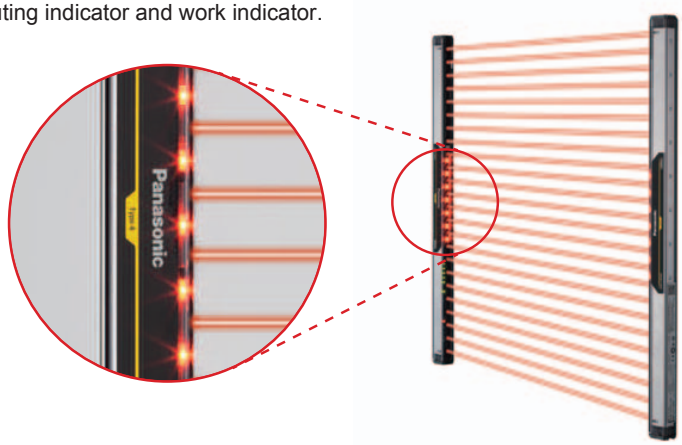

FIBER SENSORS
LASER SENSORS
PHOTOELECTRIC SENSORS
MICRO PHOTOELECTRIC SENSORS
AREA SENSORS
LIGHT CURTAINS / SAFETY COMPONENTS
PRESSURE / FLOW SENSORS
INDUCTIVE PROXIMITY SENSORS
PARTICULAR USE SENSORS
SENSOR OPTIONS
SIMPLE WIRE-SAVING UNITS
WIRE-SAVING SYSTEMS
MEASUREMENT SENSORS
STATIC ELECTRICITY PREVENTION DEVICES
LASER MARKERS
PLC
HUMAN MACHINE INTERFACES
ENERGY CONSUMPTION VISUALIZATION COMPONENTS
FA COMPONENTS
MACHINE VISION SYSTEMS
UV CURING SYSTEMS

Selection Guide
Light Curtains
Safety Components
Optical Touch Switch
Control Units
Definition of Sensing Heights

SF4B-C
SF4C
SF2C
SF4B
SF2B
BSF4-AH80

Handy-controller SFB-HC (optional) offers easy access to settings for a range of functionality

Muting control function for individual beams: Limit the muting area

SF4B-□CA-J05

The **SFB-HC** handy-controller (optional) allows to perform muting control for certain beams only. Since beam channels can be specified, so there is no need to install a separate guard to prevent intrusions. For example, according to the height of a sensing object, when muting control from the lowermost beam channel to the 10th beam channel is activated, the light curtain will detect any beam interruption at the 11th or higher beam channel as a human entry and stop the machinery.

During muting (line operating)

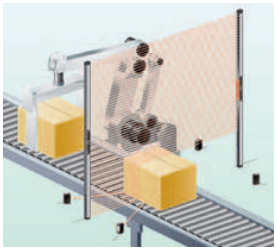

Line stopped

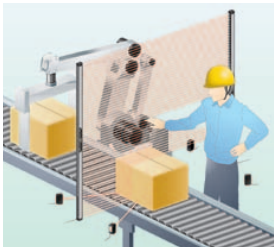

Fixed blanking function: Choose active beam channels

The **SFB-HC** handy-controller provides a fixed blanking function that prevents control output (OSSD) from turning off even if certain beam channels are interrupted. This function is convenient for applications where an obstacle always interrupts certain beam channels. Additionally, it is safe since control output (OSSD) is forcibly turned off in the event the obstruction moves outside the detection area.

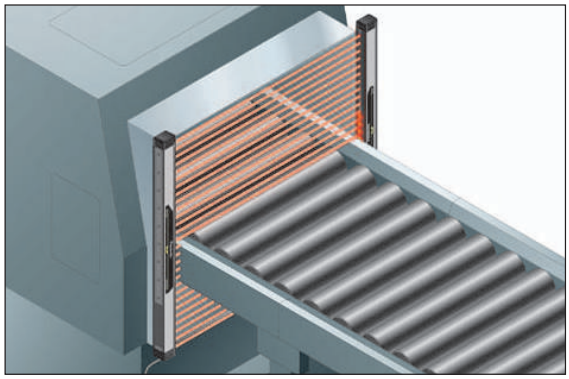

Floating blanking function: Disable unspecified beams

The floating blanking function allows to disable up to three unspecified beam channels. Control output (OSSD) will not turn off as long as the number of interrupted beam channels is less than the set number of beam channels. This function is convenient when an obstruction moves inside the detection area during setup changes or when loading materials within the detection area of light curtain.

* The min. sensing object will change when the floating blanking function is used.

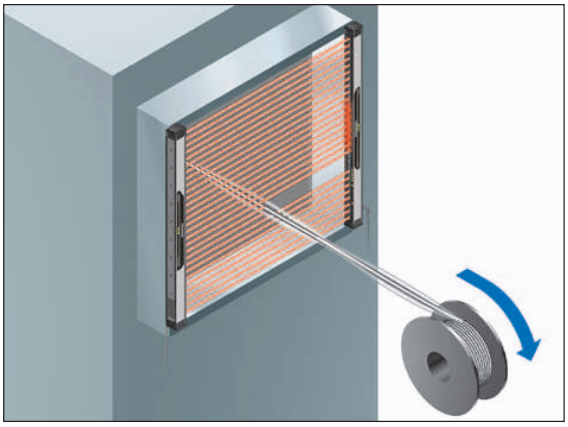

Use output and indicators to achieve preventive maintenance when the incident light intensity gets unstable

By setting the auxiliary output switching function to off or on when light reception becomes unstable, the light curtain provides notification in the event of a reduction in the incident light intensity due to beam misalignment or dirt via auxiliary output (non-safety output) in addition to the incident light intensity indicator.

Incident light intensity indicator			Auxiliary output: Set to off for unstable incident light (Note 3)	Auxiliary output: Set to on for unstable incident light (Note 3)
Incident light intensity (Note 1) 130 %		Under stable light received condition: Green (Incident light intensity: 130 % or greater)	ON	OFF
100 %		Under unstable light received condition: Orange (Incident light intensity: 100 % to less than 130 %)	OFF	ON
		When light is interrupted (Note 2): Off	—	—

Notes: 1) An incident light intensity value of 100 % refers to the threshold value at which control outputs (OSSD1, OSSD2) change from off to on.
2) Interruption of the light refers to the presence of an object interrupts beam in the detection area.
3) This setting is not available when using muting control for individual beams, fixed blanking, or floating blanking.

Extensive array of other functions

PNP / NPN polarity support

Since a single model number can be switched between PNP and NPN input, fewer model numbers need to be registered.

External device monitor function

External devices (such as safety relays, etc.) can be directly connected to the handy-controller without any dedicated unit, simplifying installation, reducing costs, and helping to avoid various problems.

Extraneous light check & avoid (ELCA) function

The ELCA function reduces interference without an interference prevention line.

Beam-axis alignment indicator

Beam-axis alignment indicators are indicated in 4 blocks, allowing to see at a glance where light is being received.

PRODUCT CONFIGURATION

Pigtailed type (with muting function)
(with 0.5 m 1.640 ft connector attached cable)

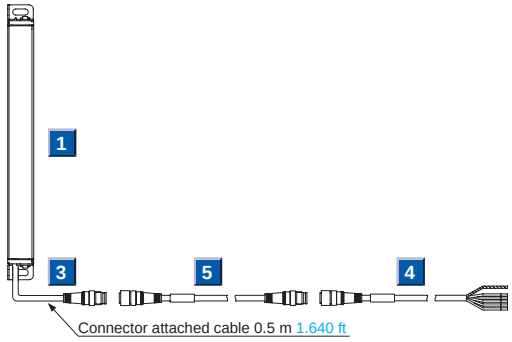

Cable type
(with 5 m 16.404 ft cable)

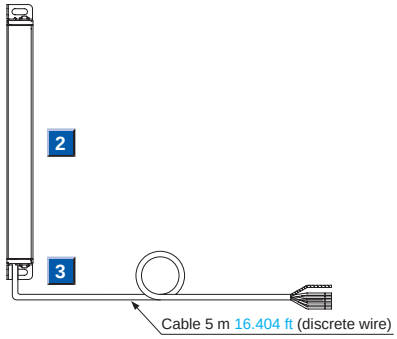

ORDER GUIDE

1 2 Light curtains

Type		Appearance	Operating range (Note 1)	Model No. (Note 2) 1 Pigtailed type (with muting function)	2 Cable type	Number of beam channels	Protective height
Hand protection type	Min. sensing object ø25 mm ø0.984 in (20 mm 0.787 in beam pitch)	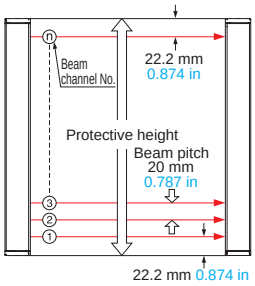	0.3 to 7 m 0.984 to 22.966 ft	SF4B-H12CA-J05	SF4B-H12C	12	263.4 mm 10.370 in
				SF4B-H16CA-J05	SF4B-H16C	16	343.4 mm 13.520 in
				SF4B-H20CA-J05	SF4B-H20C	20	423.4 mm 16.669 in
				SF4B-H24CA-J05	SF4B-H24C	24	503.4 mm 19.819 in
				SF4B-H28CA-J05	SF4B-H28C	28	583.4 mm 22.969 in
				SF4B-H32CA-J05	SF4B-H32C	32	663.4 mm 26.118 in
				SF4B-H36CA-J05	SF4B-H36C	36	743.4 mm 29.268 in
				SF4B-H40CA-J05	SF4B-H40C	40	823.4 mm 32.417 in
				SF4B-H48CA-J05	SF4B-H48C	48	983.4 mm 38.717 in
				SF4B-H56CA-J05	SF4B-H56C	56	1,143.4 mm 45.016 in
				SF4B-H64CA-J05	SF4B-H64C	64	1,303.4 mm 51.315 in
				SF4B-H72CA-J05	SF4B-H72C	72	1,463.4 mm 57.614 in
				SF4B-H80CA-J05	SF4B-H80C	80	1,623.4 mm 63.913 in
				SF4B-H88CA-J05	SF4B-H88C	88	1,783.4 mm 70.212 in
				SF4B-H96CA-J05	SF4B-H96C	96	1,943.4 mm 76.512 in
Arm / Foot protection type	Min. sensing object ø45 mm ø1.772 in (40 mm 1.575 in beam pitch)	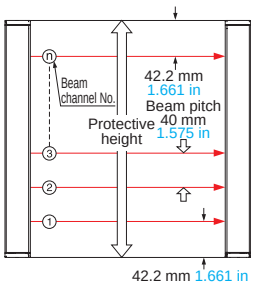	0.3 to 7 m 0.984 to 22.966 ft	SF4B-A8CA-J05	SF4B-A8C	8	343.4 mm 13.520 in
				SF4B-A12CA-J05	SF4B-A12C	12	503.4 mm 19.819 in
				SF4B-A16CA-J05	SF4B-A16C	16	663.4 mm 26.118 in
				SF4B-A20CA-J05	SF4B-A20C	20	823.4 mm 32.417 in
				SF4B-A24CA-J05	SF4B-A24C	24	983.4 mm 38.717 in
				SF4B-A28CA-J05	SF4B-A28C	28	1,143.4 mm 45.016 in
				SF4B-A32CA-J05	SF4B-A32C	32	1,303.4 mm 51.315 in
				SF4B-A36CA-J05	SF4B-A36C	36	1,463.4 mm 57.614 in
				SF4B-A40CA-J05	SF4B-A40C	40	1,623.4 mm 63.913 in
				SF4B-A44CA-J05	SF4B-A44C	44	1,783.4 mm 70.212 in
				SF4B-A48CA-J05	SF4B-A48C	48	1,943.4 mm 76.512 in

Notes: 1) The operating range is the distance possible to set between the emitter and the receiver.

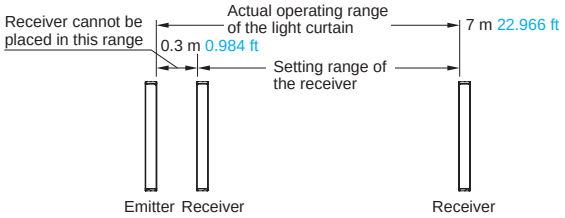

2) The model No. with **"E"** shown on the label affixed to the product is the emitter, **"D"** shown on the label is the receiver.

ORDER GUIDE

3 Mounting brackets

Mounting bracket is not supplied with the light curtain. Be sure to order it separately.

Designation	Appearance	Model No.	Description
Standard mounting bracket	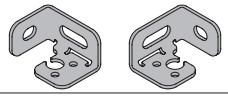	**MS-SF4BC-1**	Allows the light curtain to be mounted on the rear or side of the target equipment. Designed for use with one M5 hexagon-socket head bolt. (4 pcs. per set for the emitter and receiver)
Rear utility mounting bracket	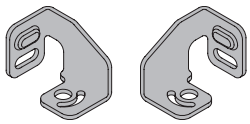	**MS-SF4BC-2**	Allows the light curtain to be mounted on the rear of the target equipment. Allows beam adjustment. Designed for use with one M5 hexagon-socket head bolt. For space-saving mounting, use one M5 hexagon head bolt. (4 pcs. per set for the emitter and receiver)
Side utility mounting bracket	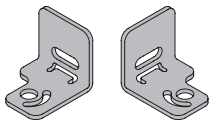	**MS-SF4BC-3**	Allows the light curtain to be mounted on the side of the target equipment. Allows beam adjustment. Designed for use with one M5 hexagon-socket head bolt. For space-saving mounting, use one M5 hexagon head bolt. (4 pcs. per set for the emitter and receiver)
Intermediate supporting bracket for utility mounting bracket (Note 1)	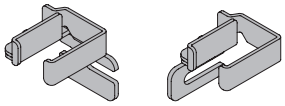	**MS-SF4BC-4**	Supports the middle of the light curtain when installing it with utility mounting brackets. Allows the light curtain to be mounted on the rear or side of the target equipment. Allows beam adjustment. Designed for use with one M5 hexagon head bolt. (2 pcs. each per set for rear mounting and side mounting)
Intermediate supporting bracket for standard mounting bracket (Note)	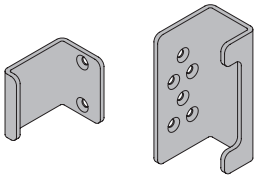	**MS-SF4BC-5**	Supports the middle of the light curtain when installing it with standard mounting brackets. Allows the light curtain to be mounted on the rear or side of the target equipment. Designed for use with two M3 countersunk screws. (2 pcs. each per set for rear mounting and side mounting)
Side mounting bracket	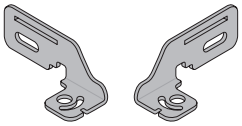	**MS-SF4BC-6**	Allows beam axis alignment and the light curtain to be mounted on the device in confined spaces. Designed for use with one M5 hexagon-socket head bolt. (4 pcs. per set for the emitter and receiver)
Intermediate supporting bracket for use with side mounting bracket (Note)	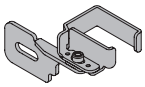	**MS-SF4BC-7**	Supports the middle of the light curtain when installing it with side mounting brackets. Allows beam axis alignment and the light curtain to be mounted on the device in confined spaces. Designed for use with one M5 hexagon-socket head bolt. (2 pces. per set)

Note: The numbers of sets required by **SF4B-H□C(A-J05)**(40 or more beam axes) and **SF4B-A□C(A-J05)** (20 or more beam axes) are as follows:
SF4B-H40C(A-J05), **SF4B-H48C(A-J05)**, **SF4B-H56C(A-J05)**, **SF4B-A20C(A-J05)**, **SF4B-A24C(A-J05)**, **SF4B-A28C(A-J05)**: 1 set
SF4B-H64C(A-J05), **SF4B-H72C(A-J05)**, **SF4B-H80C(A-J05)**, **SF4B-H88C(A-J05)**, **SF4B-H96C(A-J05)**, **SF4B-A32C(A-J05)**, **SF4B-A36C(A-J05)**, **SF4B-A40C(A-J05)**, **SF4B-A44C(A-J05)**, **SF4B-A48C(A-J05)**: 2 sets

Standard mounting bracket and intermediate supporting bracket for standard mounting bracket

⟨In case of side mounting⟩ ⟨In case of side mounting⟩

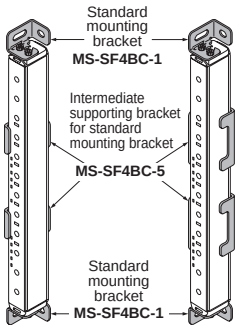

- **MS-SF4BC-1**
  Four brackets (two each R and L type) per set
  (Eight M3 (length: 5 mm 0.197 in) hexagon-socket head bolts and four M5 flat washers are attached.)
- **MS-SF4BC-5**
  Two pcs. for rear mounting, two pcs. for side mounting

Rear utility mounting bracket and intermediate supporting bracket for utility mounting bracket

⟨Space-saving mounting (Note)⟩ ⟨Standard mounting⟩

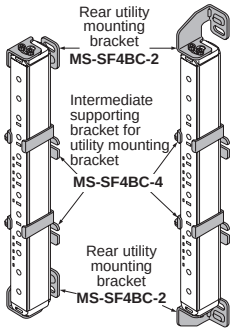

- **MS-SF4BC-2**
  Four brackets (two each R and L type) per set
  (Eight M3 (length: 6 mm 0.236 in) hexagon-socket head bolts and four M5 flat washers are attached.)
- **MS-SF4BC-4**
  Two brackets per set
  (M5 flat washers, two pcs. assembled M3 (length: 6 mm 0.236 in) hexagon-socket head bolts for rear mounting, two pcs. attachments for side mounting)

Side utility mounting bracket and intermediate supporting bracket for utility mounting bracket

⟨Space-saving mounting (Note)⟩ ⟨Standard mounting⟩

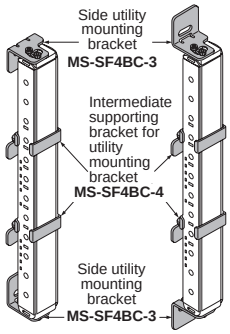

- **MS-SF4BC-3**
  Four brackets (two each R and L type) per set
  (Eight M3 (length: 6 mm 0.236 in) hexagon-socket head bolts and four M5 flat washers are attached.)
- **MS-SF4BC-4**
  Two brackets per set
  (M5 flat washers, two pcs. assembled M3 (length: 6 mm 0.236 in) hexagon-socket head bolts for rear mounting, two pcs. attachments for side mounting)

Side mounting bracket and intermediate supporting bracket for use with side mounting bracket

⟨Space-saving mounting⟩ ⟨Standard mounting⟩

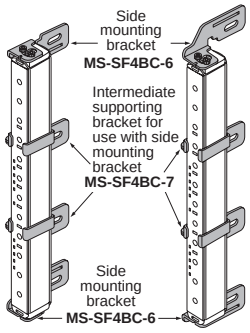

- **MS-SF4BC-6**
  Four brackets (two each R and L type) per set
  (Eight M3 (length: 6 mm 0.236 in) hexagon-socket head bolts and four M5 flat washers are attached.)
- **MS-SF4BC-7**
  Two brackets per set
  (Two pcs. M5 flat washers, two pcs. assembled M3 (length: 6 mm 0.236 in) hexagon-socket head bolts for side mounting)

Note: For space-saving mounting, use an M5 hexagon head bolt.

ORDER GUIDE

4 5 Mating cables

Type			Appearance	Model No.	Description	
Mating cables	4 With connector on one end		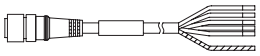	SFB-CC3-MU	Length: 3 m 9.843 ft Net weight: 430 g approx. (2 cables)	Cable with connector on one end for pigtailed type (with muting function) Two cables per set for emitter and receiver Cable color: Gray for emitter, Gray with black line for receiver Connector color: Gray for emitter, Black for receiver Min. bending radius: R6 mm R0.236 in
				SFB-CC7-MU	Length: 7 m 22.966 ft Net weight: 1,000 g approx. (2 cables)	
				SFB-CC10-MU	Length: 10 m 32.808 ft Net weight: 1,300 g approx. (2 cables)	
	With connectors on both ends 5	For emitter		SFB-CCJ3E-MU	Length: 3 m 9.843 ft Net weight: 190 g approx. (1 cable)	Cable with connectors on both ends for pigtailed type (with muting function) Cable color: Gray for emitter, Gray with black line for receiver Connector color: Gray for emitter, Black for receiver Min. bending radius: R6 mm R0.236 in
				SFB-CCJ10E-MU	Length: 10 m 32.808 ft Net weight: 660 g approx. (1 cable)	
		For receiver		SFB-CCJ3D-MU	Length: 3 m 9.843 ft Net weight: 210 g approx. (1 cable)	
				SFB-CCJ10D-MU	Length: 10 m 32.808 ft Net weight: 680 g approx. (1 cable)	

Spare parts (Accessories for light curtain)

Designation	Model No.	Description
Test rod ø25	SF4B-TR25	Min. sensing object for regular checking (ø25 mm ø0.984 in), for hand protection type (min. sensing object ø25 mm ø0.984 in)

OPTIONS

Control units

Designation	Appearance	Model No.	Description
Slim type control unit	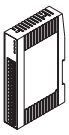	SF-C13	Use a discrete wire cable to connect to the light curtain. Muting function can be used. Compatible with up to Control Category 4. When connecting pigtailed type (with muting function) **SF4B-□CA-J05**, be sure to order a mating cable separately. • Mating cable: **SFB-CC□-MU** • Extension cable: **SFB-CCJ□-MU**

Handy-controller

Designation	Appearance	Model No.
Handy-controller	 * 2 adapter cables included	SFB-HC
Cable set for cable type connection	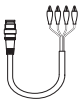	SFC-WNC1

Pigtailed type (with muting function)

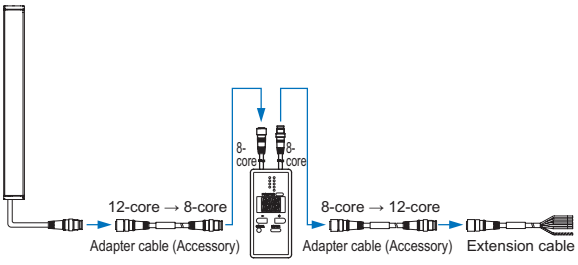

Cable type

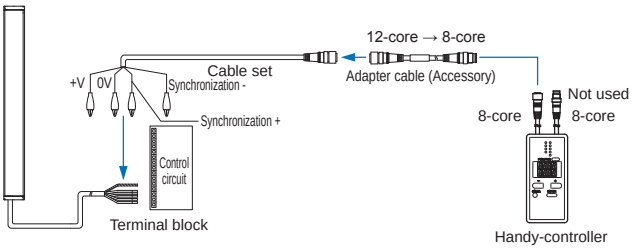

OPTIONS

Metal protection case

Applicable beam channels (Designation)		Appearance	Metal protection case (2 pcs. per set) (Note)
Hand protection type	Arm / Foot protection type		Model No.
12	———	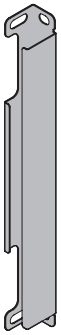	**MS-SF4BCH-12**
16	8		**MS-SF4BCH-16**
20	———		**MS-SF4BCH-20**
24	12		**MS-SF4BCH-24**
28	———		**MS-SF4BCH-28**
32	16		**MS-SF4BCH-32**
36	———		**MS-SF4BCH-36**
40	20		**MS-SF4BCH-40**
48	24		**MS-SF4BCH-48**
56	28		**MS-SF4BCH-56**
64	32		**MS-SF4BCH-64**
72	36		**MS-SF4BCH-72**
80	40		**MS-SF4BCH-80**
88	44		**MS-SF4BCH-88**
96	48		**MS-SF4BCH-96**

Note: In the case of using a metal protection case **MS-SF4BCH-□**(optional), make sure to assemble it with a standard mounting bracket **MS-SF4BC-1** (optional).

Others

Designation	Model No.	Description
Test rod ø45	**SF4B-TR45**	Min. sensing object for regular checking (ø45 mm ø1.772 in), for arm / foot protection type (min. sensing object ø45 mm ø1.772 in)
Large display unit for light curtain	**SF-IND-2**	With the auxiliary output of the light curtain, the operation is easily observable from various directions. **Specifications** • Supply voltage: 24 V DC ±15 % • Current consumption: 12 mA or less • Indicators: Orange LED (8 pcs. used) [Light up when external contact is ON] • Ambient temperature: –10 to +55 °C +14 to +131 °F (No dew condensation or icing allowed) • Material: POM (Enclosure) Polycarbonate (Cover) Cold rolled carbon steel (SPCC) (Bracket) • Cable: 0.3 mm² 2-core cabtyre cable, 3 m 9.843 ft long • Weight: 70 g approx. (including bracket)

Large display unit for light curtain

• **SF-IND-2**

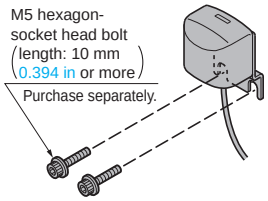

* Cannot be attached together with a mounting bracket to the light curtain using a single bolt.

Recommended safety relay

Safety relay
Panasonic Corporation
SF series

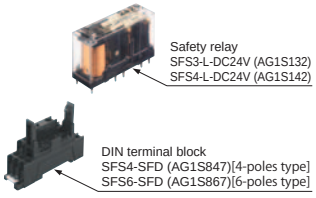

Note: Contact Panasonic Corporation for details on the recommended products.

Item \ Type	With LED indicator	
Model No.	SFS3-L-DC24V	SFS4-L-DC24V
Part No.	AG1S132	AG1S142
Contact arrangement	3a1b	4a2b
Rated nominal switching capacity	6 A / 250 V AC, 6 A / 30 V DC	
Min. switching capacity	1 mA / 5 V DC	
Coil rating	15 mA / 24 V DC	20.8 mA / 24 V DC
Rated power consumption	360 mW	500 mW
Operation time	20 ms or less	
Release time	20 ms or less	
Ambient temperature	–40 to +85 °C –40 to +185 °F (Humidity: 5 to 85 % RH)	
Applicable standards	UL, C-UL, TÜV, Korea's S-mark	

SPECIFICATIONS

Light curtain individual specifications

SF4B-H□C(A-J05)

Item	Type	Min. sensing object ø25 mm ø0.984 in (20 mm 0.787 in beam pitch)						
Model No.	Pigtailed type	SF4B-H12CA-J05	SF4B-H16CA-J05	SF4B-H20CA-J05	SF4B-H24CA-J05	SF4B-H28CA-J05	SF4B-H32CA-J05	SF4B-H36CA-J05
	Cable type	SF4B-H12C	SF4B-H16C	SF4B-H20C	SF4B-H24C	SF4B-H28C	SF4B-H32C	SF4B-H36C
Number of beam channels		12	16	20	24	28	32	36
Protective height		263.4 mm 10.37 in	343.4 mm 13.52 in	423.4 mm 16.669 in	503.4 mm 19.819 in	583.4 mm 22.969 in	663.4 mm 26.118 in	743.4 mm 29.268 in
Current consumption	Cable type	Emitter: 65 mA or less, Receiver: 75 mA or less			Emitter: 70 mA or less Receiver: 85 mA or less		Emitter: 75 mA or less Receiver: 95 mA or less	
	Pigtailed type: When large multi-purpose indicator turns OFF							
	Pigtailed type: When large multi-purpose indicator lights up	Emitter: 75 mA or less, Receiver: 85 mA or less			Emitter: 80 mA or less Receiver: 95 mA or less		Emitter: 85 mA or less Receiver: 105 mA or less	
PFHd*		1.9×10^{-9}	2.1×10^{-9}	2.4×10^{-9}	2.6×10^{-9}	2.8×10^{-9}	3.0×10^{-9}	3.3×10^{-9}
MTTFd*		100 years or more						
Net weight (Total of emitter and receiver)	Pigtailed type	Approx. 360 g	Approx. 430 g	Approx.520 g	Approx. 590 g	Approx. 680 g	Approx. 750 g	Approx. 840 g
	Cable type	Approx. 700 g	Approx. 770 g	Approx. 860 g	Approx. 930 g	Approx. 1,000 g	Approx. 1,100 g	Approx. 1,200 g

Item	Type	Min. sensing object ø25 mm ø0.984 in (20 mm 0.787 in beam pitch)						
Model No.	Pigtailed type	SF4B-H40CA-J05	SF4B-H48CA-J05	SF4B-H56CA-J05	SF4B-H64CA-J05	SF4B-H72CA-J05	SF4B-H80CA-J05	SF4B-H88CA-J05
	Cable type	SF4B-H40C	SF4B-H48C	SF4B-H56C	SF4B-H64C	SF4B-H72C	SF4B-H80C	SF4B-H88C
Number of beam channels		40	48	56	64	72	80	88
Protective height		823.4 mm 32.417 in	983.4 mm 38.717 in	1,143.4 mm 45.016 in	1,303.4 mm 51.315 in	1,463.4 mm 57.614 in	1,623.4 mm 63.913 in	1,783.4 mm 70.212 in
Current consumption	Cable type	Emitter: 80 mA or less Receiver: 100 mA or less		Emitter: 85 mA or less Receiver: 120 mA or less		Emitter: 95 mA or less Receiver: 130 mA or less		Emitter: 100 mA or less Receiver: 140 mA or less
	Pigtailed type: When large multi-purpose indicator turns OFF							
	Pigtailed type: When large multi-purpose indicator lights up	Emitter: 90 mA or less Receiver: 110 mA or less		Emitter: 95 mA or less Receiver: 130 mA or less		Emitter: 105 mA or less Receiver: 140 mA or less		Emitter: 110 mA or less Receiver: 155 mA or less
PFHd*		3.5×10^{-9}	3.9×10^{-9}	4.4×10^{-9}	4.8×10^{-9}	5.3×10^{-9}	5.7×10^{-9}	6.2×10^{-9}
MTTFd*		100 years or more						
Net weight (Total of emitter and receiver)	Pigtailed type	Approx. 910 g	Approx. 1,100 g	Approx. 1,300 g	Approx. 1,400 g	Approx. 1,600 g	Approx. 1,700 g	Approx. 1,800 g
	Cable type	Approx. 1,300 g	Approx. 1,400 g	Approx. 1,600 g	Approx. 1,700 g	Approx. 2,000 g	Approx. 2,000 g	Approx. 2,100 g

* PFH_d: Probability of dangerous failure per hour, MTTFd: Mean time to dangerous failure.

SF4B-A□C(A-J05)

Item	Type	Min. sensing object ø25 mm ø0.984 in (20 mm 0.787 in beam pitch)	Min. sensing object ø45 mm ø1.772 in (40 mm 1.575 in beam pitch)			
Model No.	Pigtailed type	SF4B-H96CA-J05	SF4B-A8CA-J05	SF4B-A12CA-J05	SF4B-A16CA-J05	SF4B-A20CA-J05
	Cable type	SF4B-H96C	SF4B-A8C	SF4B-A12C	SF4B-A16C	SF4B-A20C
Number of beam channels		96	8	12	16	20
Protective height		1,943.4 mm 76.512 in	343.4 mm 13.52 in	503.4 mm 19.819 in	663.4 mm 26.118 in	823.4 mm 32.417 in
Current consumption	Cable type	Emitter: 105 mA or less Receiver: 145 mA or less	Emitter: 60 mA or less Receiver: 70 mA or less		Emitter: 65 mA or less Receiver: 75 mA or less	
	Pigtailed type: When large multi-purpose indicator turns OFF					
	Pigtailed type: When large multi-purpose indicator lights up	Emitter: 115 mA or less Receiver: 155 mA or less	Emitter: 70 mA or less Receiver: 80 mA or less		Emitter: 75 mA or less Receiver: 85 mA or less	
PFHd*		6.6×10^{-9}	1.7×10^{-9}	1.9×10^{-9}	2.2×10^{-9}	2.4×10^{-9}
MTTFd*		100 years or more	100 years or more			
Net weight (Total of emitter and receiver)	Pigtailed type	Approx. 1,900 g	Approx. 430 g	Approx. 590 g	Approx. 750 g	Approx. 910 g
	Cable type	Approx. 2,200 g	Approx. 770 g	Approx. 930 g	Approx. 1,100 g	Approx. 1,300 g

Item	Type	Min. sensing object ø45 mm ø1.772 in (40 mm 1.575 in beam pitch)						
Model No.	Pigtailed type	SF4B-A24CA-J05	SF4B-A28CA-J05	SF4B-A32CA-J05	SF4B-A36CA-J05	SF4B-A40CA-J05	SF4B-A44CA-J05	SF4B-A48CA-J05
	Cable type	SF4B-A24C	SF4B-A28C	SF4B-A32C	SF4B-A36C	SF4B-A40C	SF4B-A44C	SF4B-A48C
Number of beam channels		24	28	32	36	40	44	48
Protective height		983.4 mm 38.717 in	1,143.4 mm 45.016 in	1,303.4 mm 51.315 in	1,463.4 mm 57.614 in	1,623.4 mm 63.913 in	1,783.4 mm 70.212 in	1,943.4 mm 76.512 in
Current consumption	Cable type	Emitter: 70 mA or less Receiver: 85 mA or less		Emitter: 75 mA or less Receiver: 95 mA or less			Emitter: 80 mA or less Receiver: 100 mA or less	
	Pigtailed type: When large multi-purpose indicator turns OFF							
	Pigtailed type: When large multi-purpose indicator lights up	Emitter: 80 mA or less Receiver: 95 mA or less		Emitter: 85 mA or less Receiver: 105 mA or less			Emitter: 90 mA or less Receiver: 110 mA or less	
PFHd*		2.7×10^{-9}	2.9×10^{-9}	3.2×10^{-9}	3.4×10^{-9}	3.7×10^{-9}	3.9×10^{-9}	4.2×10^{-9}
MTTFd*		100 years or more						
Net weight (Total of emitter and receiver)	Pigtailed type	Approx. 1,100 g	Approx. 1,300 g	Approx. 1,400 g	Approx. 1,600 g	Approx. 1,700 g	Approx. 1,800 g	Approx. 1,900 g
	Cable type	Approx. 1,400 g	Approx. 1,600 g	Approx. 1,700 g	Approx. 2,000 g	Approx. 2,000 g	Approx. 2,100 g	Approx. 2,200 g

* PFHd: Probability of dangerous failure per hour. MTTFd: Mean time to dangerous failure.

SPECIFICATIONS

Light curtain common specifications

Item	Type	Pigtailed type (with muting function)		Cable type	
		Min. sensing object ø25 mm ø0.984 in (20 mm 0.787 in beam pitch)	Min. sensing object ø45 mm ø1.772 in (40 mm 1.575 in beam pitch)	Min. sensing object ø25 mm ø0.984 in (20 mm 0.787 in beam pitch)	Min. sensing object ø45 mm ø1.772 in (40 mm 1.575 in beam pitch)
	Model No.	**SF4B-H□CA-J05**	**SF4B-A□CA-J05**	**SF4B-H□C**	**SF4B-A□C**
Applicable standards	International standard	IEC 61496-1/2 (Type 4), ISO 13849-1 (Category 4, PLe), IEC 61508-1 to 7 (SIL3)			
	Japan	JIS B 9704-1/2 (Type 4), JIS B 9705-1 (Category 4), JIS C 0508 (SIL3)			
	Europe (EU) (Note 2)	EN 61496-1 (Type 4), EN ISO 13849-1 (Category 4, PLe), EN 61508-1 to 7 (SIL3), EN 55011, EN 50178, EN 61000-6-2			
	North America (Note 3)	ANSI/UL 61496-1/2 (Type 4), ANSI/UL 508, CAN/CSA 61496-1/2 (Type 4), CAN/CSA C22.2 No.14, OSHA 1910.212, OSHA 1910.217(C), ANSI B11.1 to B11.19, ANSI/RIA 15.06			
	South Korea (S-Mark)	S1-G-35-2005, S2-W-11-2003			
Operating range (Note 4)		0.3 to 7 m 0.984 to 22.966 ft			
Beam pitch		20 mm 0.787 in	40 mm 1.575 in	20 mm 0.787 in	40 mm 1.575 in
Min. sensing object (Note 5)		ø25 mm ø0.984 in opaque object	ø45 mm ø1.772 in opaque object	ø25 mm ø0.984 in opaque object	ø45 mm ø1.772 in opaque object
Effective aperture angle		±2.5° or less [for an operating range exceeding 3 m 9.843 ft (conforming to IEC 61496-2 / UL 61496-2)]			
Supply voltage		24 V DC ±10 % Ripple P-P 10 % or less			
Control outputs (OSSD 1, OSSD 2)		PNP open-collector transistor / NPN open-collector transistor (switching method) <For PNP output> • Maximum source current: 200 mA • Applied voltage: Same as supply voltage (between the control output and +V) • Residual voltage: 2.5 V or less (source current 200 mA, when using 20 m 65.617 ft length cable) • Leakage current: 0.1 mA or less (Including power supply OFF condition) • Maximum load capacity: 0.22 µF (No load to maximum output current) • Load wiring resistance: 3 Ω or less <For NPN output> • Maximum sink current: 200 mA • Applied voltage: Same as supply voltage (between the control output and 0 V) • Residual voltage: 2.5 V or less (sink current 200 mA, when using 20 m 65.617 ft length cable) • Leakage current: 0.1 mA or less (Including power supply OFF condition) • Maximum load capacity: 0.22 µF (No load to maximum output current) • Load wiring resistance: 3 Ω or less			
	Operation mode	ON when all beam channels are received, OFF when one or more beam channels are interrupted (OFF also in case of any malfunction in the light curtain or the synchronization signal) (Note 6, 7)			
	Protection circuit	Incorporated			
Response time		OFF response: 14 ms or less, ON response: 80 to 90 ms			
Auxiliary output (Non-safety output)		PNP open-collector transistor / NPN open-collector transistor (switching method) <For PNP output> • Maximum source current: 60 mA • Applied voltage: Same as supply voltage (between the auxiliary output and +V) • Residual voltage: 2.5 V or less (source current 60 mA, when using 20 m 65.617 ft length cable) <For NPN output> • Maximum sink current: 60 mA • Applied voltage: Same as supply voltage (between the auxiliary output and 0 V) • Residual voltage: 2.5 V or less (sink current 60 mA, when using 20 m 65.617 ft length cable)			
	Operation mode	OFF when control outputs are ON, ON when control outputs are OFF [Factory setting, operating mode can be changed using the **SFB-HC** (optional) handy-controller.]			
	Protection circuit	Incorporated			
Muting auxiliary output		NPN open-collector transistor • Maximum sink current: 100 mA • Applied voltage: Same as supply voltage (between the muting auxiliary output and 0 V) • Residual voltage: 2.5 V or less (sink current 100 mA, when using 20 m 65.617 ft length cable)		———	
	Operation mode	When muting auxiliary output: ON			
	Protection circuit	Incorporated			
ELCA function		Incorporated (reducing mutual interference automatically)			
Emission halt function		Incorporated			
Interlock function		Incorporated [Manual reset / Auto reset (Note 8)]			
External device monitoring function		Incorporated			
Override function		Incorporated		———	
Muting function		Incorporated		———	
Large multi-purpose indicator function		Incorporated		———	
Optional functions (Note 9)		Muting setting changing, override setting changing, fixed blanking, floating blanking, light emitting amount control, auxiliary output switching, protecting, interlock setting changing, external relay monitor setting changing		Fixed blanking, floating blanking, light emitting amount control, auxiliary output switching, protecting, interlock setting changing, external relay monitor setting changing	
Pollution degree		3			
Operating altitude		2,000 m 6,561.68 ft or less (Note 10)			
Environmental resistance	Degree of protection	IP65 (IEC)			
	Ambient temperature	–10 to +55 °C +14 to +131 °F (No dew condensation or icing allowed), Storage: –25 to +60 °C –3 to +140 °F			
	Ambient humidity	30 to 85 % RH, Storage: 30 to 85 % RH			
	Ambient illuminance	Incandescent light: 3,500 ℓx or less at the light-receiving face			
	Dielectric strength voltage / Insulation resistance	1,000 V AC for one min. between all supply terminals connected together and enclosure / 20 MΩ or more, with 500 V DC megger between all supply terminals connected together and enclosure			
	Vibration resistance / Shock resistance	10 to 55 Hz frequency, 0.75 mm 0.030 in amplitude in X, Y and Z directions for two hours each / 300 m/s² acceleration (30 G approx.) in X, Y and Z directions for three times each			

Notes:
1) Where measurement conditions have not been specified precisely, the conditions used were an ambient temperature of +20 °C +68 °F.
2) Regarding EU Machinery Directive, a Notified Body, TÜV SÜD, has certified with the type examination certificate.
3) The product has been safety-certified in accordance with UL, ANSI, CSA, and other standards by TÜV SÜD, a nationally recognized safety laboratory (NRTL) that has been approved by the Occupational Safety and Health Administration (OSHA) as defined by 29 CFR 1910.7
4) The operating range is the possible setting distance between the emitter and the receiver.
5) In case the blanking function is valid, the operation mode is changed.
6) During muting, control output will not turn off even if the beams are interrupted.
7) When the blanking function is enabled, the operating mode will change.
8) The manual reset and automatic reset are possible to be switched depending on the wiring status.
9) In case of using optional function, the handy-controller **SFB-HC** (optional) is required.
10) Do not use or store the device in an environment where the air pressure is higher than the atmospheric pressure at an altitude of 0 meters.

SPECIFICATIONS

Light curtain common specifications

Type / Item / Model No.	Pigtailed type (with muting function)		Cable type	
	Min. sensing object ø25 mm ø0.984 in (20 mm 0.787 in beam pitch)	Min. sensing object ø45 mm ø1.772 in (40 mm 1.575 in beam pitch)	Min. sensing object ø25 mm ø0.984 in (20 mm 0.787 in beam pitch)	Min. sensing object ø45 mm ø1.772 in (40 mm 1.575 in beam pitch)
Model No.	**SF4B-H□CA-J05**	**SF4B-A□CA-J05**	**SF4B-H□C**	**SF4B-A□C**
Emitting element	Infrared LED (Peak emission wavelength: 850 nm 0.033 mil)			
Material	Enclosure: Polycarbonate			
Cable	0.15 mm² (power line: 0.2 mm²) 12-core heat-resistant PVC cable with connector, 0.5 m 1.640 ft long		0.15 mm² (power line: 0.2 mm²) 8-core heat-resistant PVC cable, 5 m 16.404 ft long	
Cable extension	Extension up to total 50 m 164.042 ft is possible for both emitter and receiver optional mating cables		Extension up to total 50 m 164.042 ft is possible for 0.2 mm² or more, cable (Note)	
Accessories	**SF4B-TR25** (Test rod): 1 pc.	———	**SF4B-TR25** (Test rod): 1 pc.	———

Note: When the synchronization + wire (orange) and synchronization - wire (orange / black) is extended with a cable other than exclusive cable, use a 0.2 mm² or more shielded twisted pair cable.

Control unit

Item / Model No.		SF-C13
Connectable light curtains		Light curtains manufactured by Panasonic Industrial Devices SUNX
Applicable standards		EN 61496-1 (Type 4), EN 55011, EN ISO 13849-1 (Category 4, PLe), IEC 61496-1 (Type 4), ISO 13849-1 (Category 4, PLe), JIS B 9704-1 (Type 4), JIS B 9705-1 (Category 4), ANSI/UL 61496-1 (Type 4), UL 1998 (Class 2)
Control category		ISO 13849-1 (EN ISO 13849-1, JIS B 9705-1) compliance up to Category 4, PLe standards
Supply voltage		24 V DC ±10 % Ripple P-P 10 % or less
Current consumption		100 mA or less (excluding light curtain)
Fuse (rating)		Built-in electronic fuse, Triggering current: 0.5 A or more, Reset after power down
Enabling path		NO contact × 3 (13-14, 23-24, 33-34)
	Utilization category	AC-15, DC-13 (IEC 60947-5-1)
	Rated operation voltage (Ue) / Rated operation current (Ie)	30 V DC / 4 A, 230 V AC / 4 A, resistive load (For inductive load, during contact protection) Min. applicable load: 10 mA (at 24 V DC) (Note 2)
	Contact resistance	100 mΩ or less (initial value)
	Contact protection fuse rating	4 A (slow blow)
Pick-up delay (Auto reset / Manual reset)		80 ms or less / 90 ms or less
Response time		10 ms or less
Auxiliary output		Safety relay contact (NC contact) × 1 (41-42) (Related to enabling path)
	Rated operation voltage / current	24 V DC / 2 A, Min. applicable load: 10 mA (at 24 V DC)
	Contact protection fuse rating	2 A (slow blow)
Semiconductor auxiliary output (AUX)		PNP open-collector transistor • Maximum source current: 60 mA
	Output operation	ON when the light curtain is interrupted
Excess voltage category		II
Polarity selection function		Incorporated (Cable connection allows selection of plus / minus ground) Minus ground: Correspond to PNP output light curtain Plus ground: Correspond to NPN output light curtain
Pollution degree		2
Environmental resistance	Protection	Enclosure: IP40, Terminal: IP20
	Ambient temperature	–10 to +55 °C +14 to +131 °F (No dew condensation or icing allowed), Storage: –25 to +70 °C –13 to +158 °F
	Ambient humidity	30 to 85 % RH, Storage: 30 to 95 % RH
	Vibration resistance	Resistance / malfunction 10 to 55 Hz frequency, 0.35 mm 0.014 in amplitude in X, Y, and Z directions for twenty times each
Enclosure material		ABS
Weight		Net weight: 200 g approx.

Notes: 1) Where measurement conditions have not been specified precisely, the conditions used were an ambient temperature of +20 °C +68 °F.
2) If several **SF-C13** units are being used in line together, leave a space of 5 mm 0.197 in or more between each unit.
If the units are touching each other, reduce the rated operating current for safety output in accordance with the ambient operating temperature as shown in the graphs at right.
3) Refer to our website for details of specifications.

Dilating when SF-C13 units are mounted close together

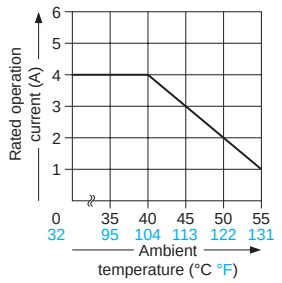

SPECIFICATIONS

Handy-controller

Item \ Model No.	SFB-HC
Supply voltage	24 V DC ±10 % Ripple P-P10 % or less (common to light curtain power supply)
Current consumption	65 mA or less
Communication method	RS-485 two-way communications (Specific procedure)
Digital display	4-digit red LED display × 2 (Selected beam channels, setting contents etc. are displayed.)
Function indicator	Green LED × 9 (set function is displayed.)
Functions	Fixed blanking (Factory setting: Disabled) / Floating blanking (Factory setting: Disabled) / Auxiliary output changing (Factory setting: Negative Logic of OSSD) / Light emitting amount control (Factory setting: Disabled) / Muting setting changing [Factory setting: All beam channels enabled, A = B, Setting of the muting lamp diagnosis function enabled (Ver. 2 or later), Muting sensor output operation setting N.O. / N.O. (Ver. 2.1 or later)] / Interlock setting changing (Factory setting: start / restart) / External device monitoring setting change (Factory setting: Enabled, 300 ms) / Override setting changing 60 sec. (Ver. 2.1 or later) / Setting detail monitoring / / Protecting (Factory setting: Disabled) (Factory password setting: 0000) / Initialization / Copy
Ambient temperature	–10 to +55 °C +14 to +131 °F (No dew condensation or icing allowed), Storage: –25 to +70 °C –13 to +158 °F
Ambient humidity	30 to 85 % RH, Storage: 30 to 85 % RH
Voltage withstandability	1,000 V AC for one min. between all supply terminals connected together and enclosure
Insulation resistance	20 MΩ , or more, with 500 V DC megger between all supply terminals connected together and enclosure
Cable	8-core shielded cable, 0.5 m 1.640 ft long, with a connector at the end (2 cables)
Weight	Net weight: 200 g approx.
Accessory	Adapter cable: 2 cables

Note: Where measurement conditions have not been specified precisely, the conditions used were an ambient temperature of +20 °C +68 °F.

I/O CIRCUIT AND WIRING DIAGRAMS

SF4B-□CA-J05

Pigtailed type (with muting function)

I/O circuit diagrams

<In case of using I/O circuit for PNP output>

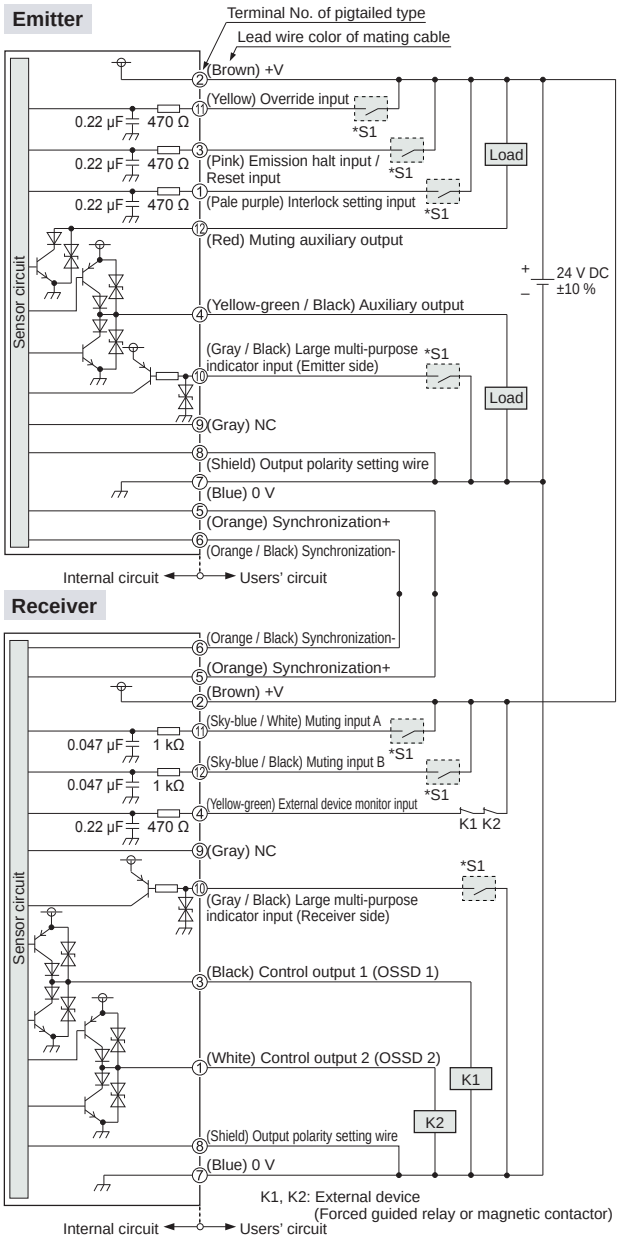

<In case of using I/O circuit for NPN output>

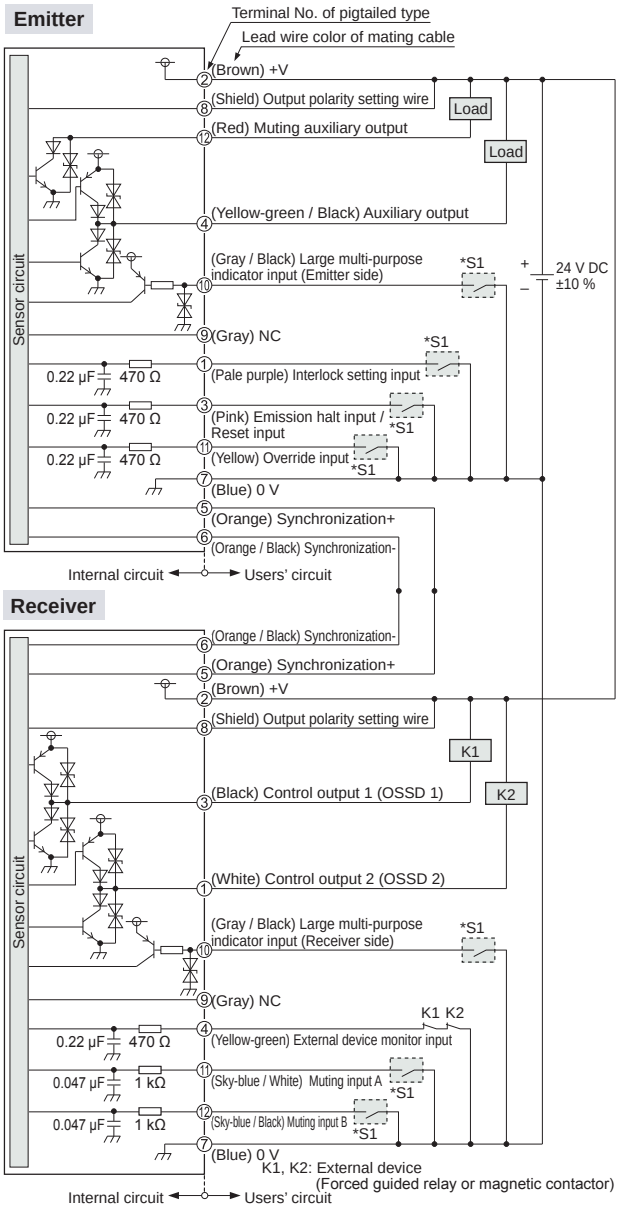

*S1

Switch S1

- Emission halt input / Reset input
  For manual reset
  Vs to Vs – 2.5 V (sink current 5 mA or less): Emission halt (Note)
  Open: Emission
  For automatic reset
  Vs to Vs – 2.5 V (sink current 5 mA or less): Emission (Note)
  Open: Emission halt
- Interlock setting input, Override input, Muting input A / B, External device monitor input
  Vs to Vs – 2.5 V (sink current 5 mA or less): Valid (Note)
  Open: Invalid
- Large multi-purpose indicator input
  0 to +1.5 V (source current 5 mA or less): Lights up, Open: Turns OFF

*S1

Switch S1

- Emission halt input / Reset input
  For manual reset
  0 to +1.5 V (source current 5 mA or less): Emission halt
  Open: Emission
  For automatic reset
  0 to +1.5 V (source current 5 mA or less): Emission
  Open: Emission halt
- Interlock setting input, Override input, Muting input A / B, External device monitor input
  0 to +1.5 V (source current: 5 mA or less): Valid, Open: Invalid
- Large multi-purpose indicator input
  0 to +1.5 V (source current 5 mA or less): Lights up, Open: Turns OFF

Note: Vs is the applying supply voltage.

I/O CIRCUIT AND WIRING DIAGRAMS

SF4B-□CA-J05

Pigtailed type (with muting function)

Connection examples

Muting control components: Interlock function "disabled (automatic reset)", external device monitoring function "enabled"

<In case of using I/O circuit for PNP output>

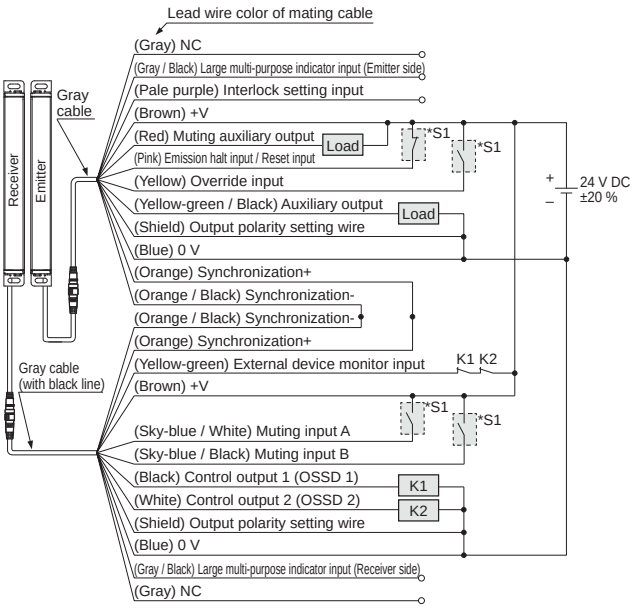

K1, K2: External device (Forced guided relay or magnetic contactor)

The diagram at left shows the configuration when using PNP output, interlock function "disabled (automatic reset)" and external device monitoring function "enabled".

In case of setting the interlock function to "enabled (manual reset)"

- When the interlock function is set to "Enable (manual reset)," the override function cannot be used.

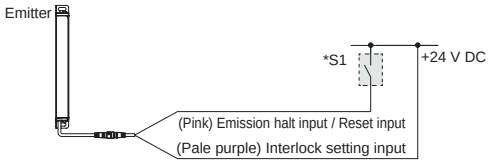

In case of setting the external device monitoring function to "disabled"

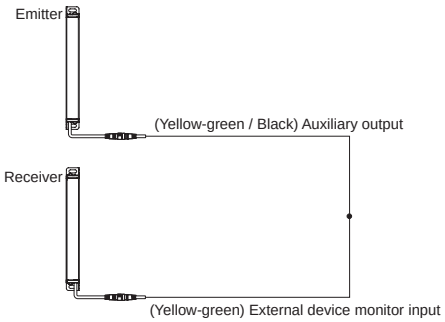

*S1

Switch S1
- Emission halt input / Reset input
  For automatic reset Vs to Vs – 2.5 V (sink current 5 mA or less): Emission (Note)
  Open: Emission halt
  For manual reset Vs to Vs – 2.5 V (sink current 5 mA or less): Emission halt (Note)
  Open: Emission
- Muting input A / B, Override input
  Vs to Vs – 2.5 V (sink current 5 mA or less): Valid (Note), Open: Invalid

Note: Vs is the applying supply voltage.

<In case of using I/O circuit for NPN output>

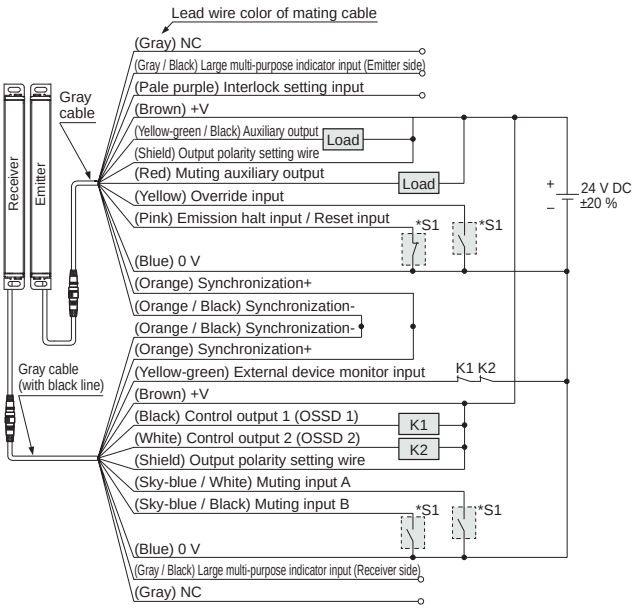

K1, K2: External device (Forced guided relay or magnetic contactor)

The diagram at left shows the configuration when using NPN output, interlock function "disabled (automatic reset)" and external device monitoring function "enabled".

In case of setting the interlock function to "enabled (manual reset)"

- When the interlock function is set to "Enable (manual reset)," the override function cannot be used.

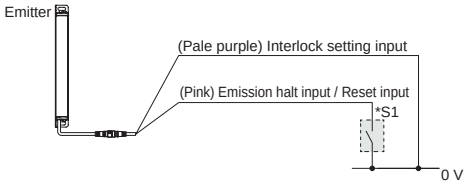

In case of setting the external device monitoring function to "disabled"

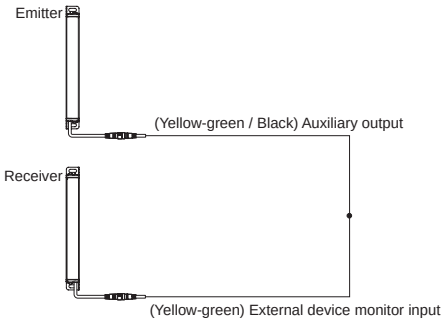

*S1

Switch S1
- Emission halt input / Reset input
  For automatic reset 0 to +1.5 V (source current 5 mA or less): Emission, Open: Emission halt
  For manual reset 0 to +1.5 V (source current 5 mA or less): Emission halt, Open: Emission
- Muting input A / B, Override input
  0 to + 1.5 V (source current 5 mA or less): Valid, Open: Invalid

I/O CIRCUIT AND WIRING DIAGRAMS

SF4B-□C Cable type

I/O circuit diagrams

<In case of using I/O circuit for PNP output>

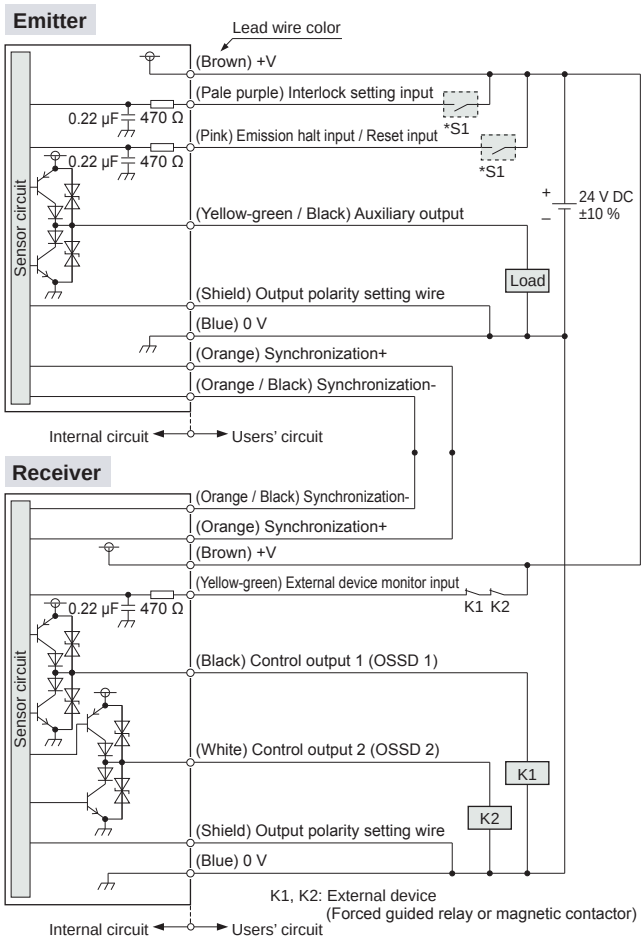

*S1

Switch S1

- Emission halt input / Reset input
  For manual reset
  Vs to Vs – 2.5 V (sink current 5 mA or less): Emission halt (Note)
  Open: Emission
  For automatic reset
  Vs to Vs – 2.5 V (sink current 5 mA or less): Emission (Note)
  Open: Emission halt
- Interlock setting input
  Vs to Vs – 2.5 V (sink current 5 mA or less): Valid (Note)
  Open: Invalid

Note: Vs is the applying supply voltage.

<In case of using I/O circuit for NPN output>

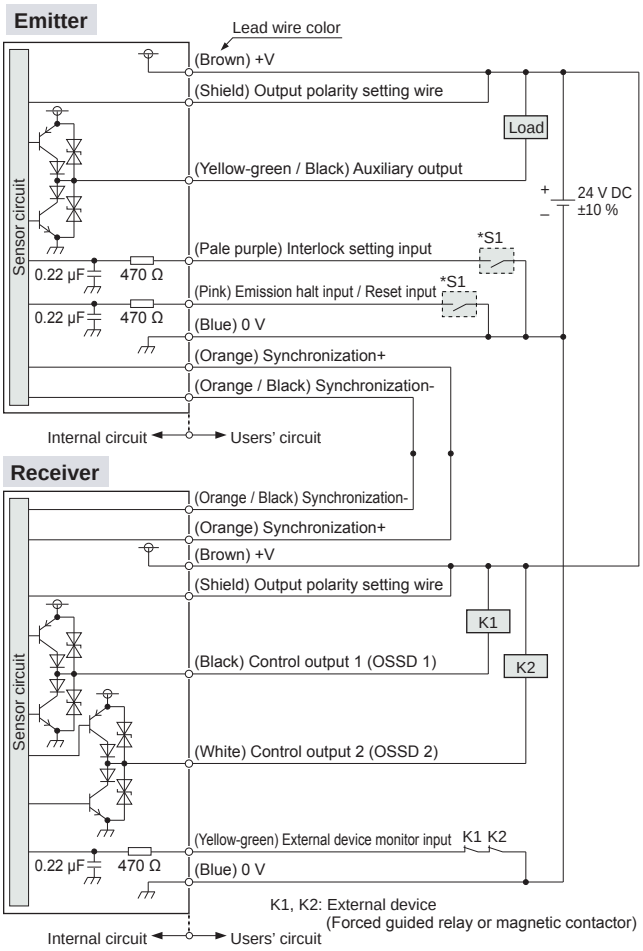

*S1

Switch S1

- Emission halt input / Reset input
  For manual reset
  0 to +1.5 V (source current 5 mA or less): Emission halt
  Open: Emission
  For automatic reset
  0 to +1.5 V (source current 5 mA or less): Emission
  Open: Emission halt
- Interlock setting input
  0 to +1.5 V (source current 5 mA or less): Valid, Open: Invalid

FIBER SENSORS
LASER SENSORS
PHOTO-ELECTRIC SENSORS
MICRO PHOTO-ELECTRIC SENSORS
AREA SENSORS
LIGHT CURTAINS / SAFETY COMPONENTS
PRESSURE / FLOW SENSORS
INDUCTIVE PROXIMITY SENSORS
PARTICULAR USE SENSORS
SENSOR OPTIONS
SIMPLE WIRE-SAVING UNITS
WIRE-SAVING SYSTEMS
MEASURE-MENT SENSORS
STATIC ELECTRICITY PREVENTION DEVICES
LASER MARKERS
PLC
HUMAN MACHINE INTERFACES
ENERGY CONSUMPTION VISUALIZATION COMPONENTS
FA COMPONENTS
MACHINE VISION SYSTEMS
UV CURING SYSTEMS
Selection Guide
Light Curtains
Safety Components
Optical Touch Switch
Control Units
Definition of Sensing Heights
SF4B-C
SF4C
SF2C
SF4B
SF2B
BSF4-AH80

I/O CIRCUIT AND WIRING DIAGRAMS

SF4B-□C

Cable type

Connection examples

Interlock function "enabled (manual reset)", external device monitoring function "enabled"

<In case of using I/O circuit for PNP output>

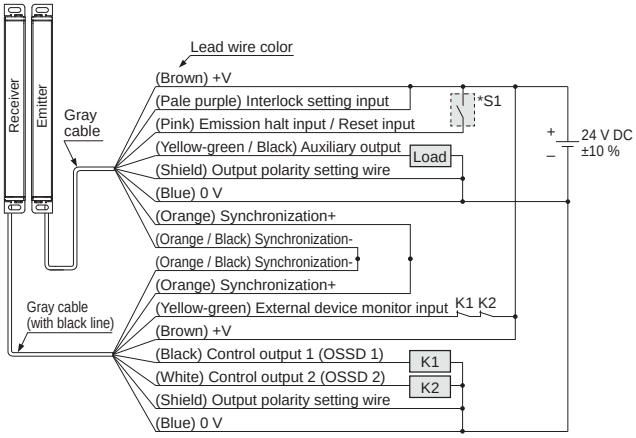

K1, K2: External device
(Forced guided relay or magnetic contactor)

The diagram at left shows the configuration when using PNP output, interlock function "enabled (manual reset)" and external device monitoring function "enabled".

In case of setting the interlock function to "disabled (automatic reset)"

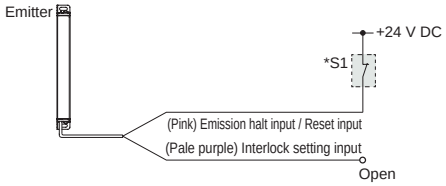

In case of setting the external device monitoring function to "disabled"

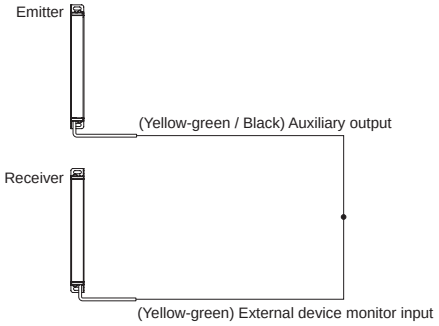

*S1

Switch S1
- Emission halt input / Reset input
  For manual reset
  Vs to Vs – 2.5 V (sink current 5 mA or less): Emission halt (Note)
  Open: Emission
  For automatic reset
  Vs to Vs – 2.5 V (sink current 5 mA or less): Emission (Note)
  Open: Emission halt
- Interlock setting input
  Vs to Vs – 2.5 V (sink current 5 mA or less): Valid (Note)
  Open: Invalid

Note: Vs is the applying supply voltage.

<In case of using I/O circuit for NPN output>

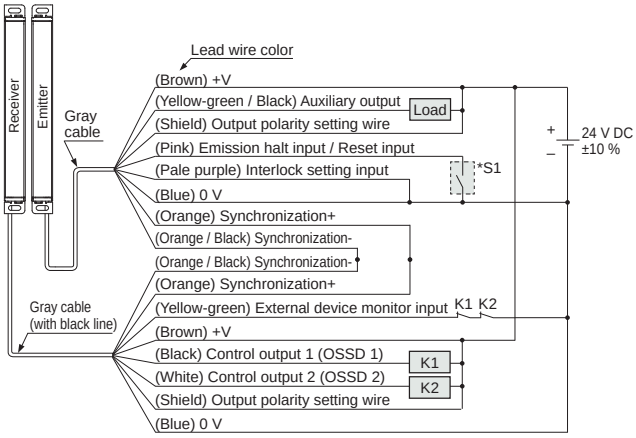

K1, K2: External device
(Forced guided relay or magnetic contactor)

The diagram at left shows the configuration when using NPN output, interlock function "enabled (manual reset)" and external device monitoring function "enabled".

In case of setting the interlock function to "disabled (automatic reset)"

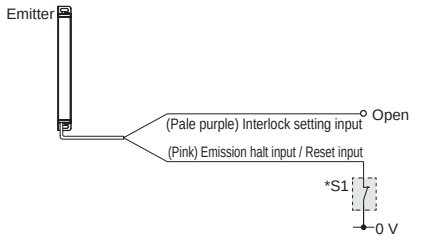

In case of setting the external device monitoring function to "disabled"

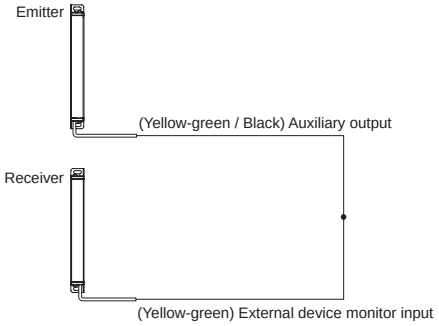

*S1

Switch S1
- Emission halt input / Reset input
  For manual reset
  0 to +1.5 V (source current 5 mA or less): Emission halt
  Open: Emission
  For automatic reset
  0 to +1.5 V (source current 5 mA or less): Emission
  Open: Emission halt
- Interlock setting input
  0 to +1.5 V (source current 5 mA or less): Valid, Open: Invalid

I/O CIRCUIT AND WIRING DIAGRAMS

SF-C13

SF4B-□C wiring diagrams (Control Category 4)

For PNP output (minus ground)

- Connect the light curtain control outputs OSSD 1 and OSSD 2 to S1 and S2 respectively.

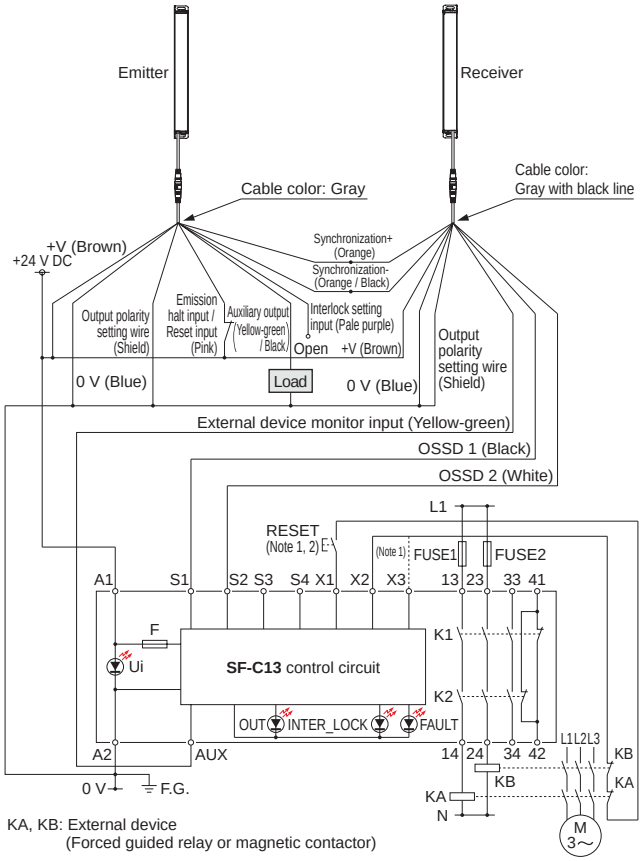

KA, KB: External device
(Forced guided relay or magnetic contactor)

Notes: 1) The above diagram is when using manual reset. If automatic reset is used, disconnect the lead from X2 and connect it to X3. In this case, a reset (RESET) button is not needed.
2) Use a momentary-type switch as the reset (RESET) button.

For NPN output (plus ground)

- Connect the light curtain control outputs OSSD 1 and OSSD 2 to S4 and S2 respectively and ground the + side.

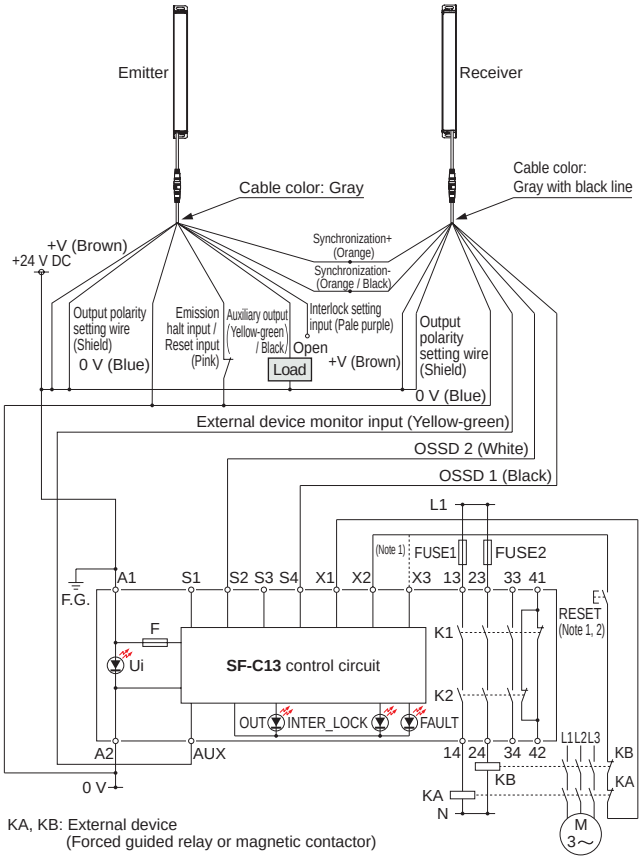

KA, KB: External device
(Forced guided relay or magnetic contactor)

Notes: 1) The above diagram is when using manual reset. If automatic reset is used, disconnect the lead from X2 and connect it to X3. In this case, a reset (RESET) button is not needed.
2) Use a momentary-type switch as the reset (RESET) button.

Terminal arrangement diagram

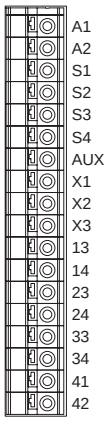

Terminal	Description
A1	+24 V DC
A2	0 V
S1 to S4	Light curtain control output (OSSD) input terminal
AUX	Semiconductor auxiliary output
X1	Reset output terminal
X2	Reset input terminal (Manual)
X3	Reset input terminal (Automatic)
13-14, 23-24, 33-34	Enabling path (NO contact × 3)
41-42	Auxiliary output (NC contact × 1)

A terminal block is required for wiring of light curtain side.

PRECAUTIONS FOR PROPER USE

Refer to the instruction manual for details.
The instruction manual can be downloaded from our website.

Wiring

Refer to the applicable regulations for the region where this device is to be used when setting up the device. In addition, make sure that all necessary measures are taken to prevent possible dangerous operating errors resulting from earth faults.

- Make sure to carry out the wiring in the power supply off condition.
- Verify that the supply voltage variation is within the rating.
- If power is supplied from a commercial switching regulator, ensure that the frame ground (F.G.) terminal of the power supply is connected to an actual ground.
- In case noise generating equipment (switching regulator, inverter motor, etc.) is used in the vicinity of this sensor, connect the frame ground (F.G.) terminal of the equipment to an actual ground.
- Do not run the wires together with high-voltage lines or power lines or put them in the same raceway. This can cause malfunction due to induction.

Interlock function

- The selection of manual reset / automatic reset is available by applying the interlock input (pale purple) wiring. The interlock becomes available by selecting manual reset.

Interlock setting input wire (pale purple)	Interlock function
When selecting PNP output: Connected to +V When selecting NPN output: Connected to 0 V	Manual reset
Open	Automatic reset

In case of using the interlock function, be sure there exists no operator inside of the dangerous area. It causes death or serious injury without the confirmation.

Manual reset

- The control outputs (OSSD 1, OSSD 2) are not turned ON automatically even though this device is received the light. When this device is reset in light received state [open the emission halt input / reset input → short-circuit the device to 0 V or +V → open], the control outputs (OSSD 1, OSSD 2) are turned ON.

The reset switch shall be placed in area where all over the dangerous zone shall be comprehend and out side of the dangerous zone.

Automatic reset

- The control outputs (OSSD 1, OSSD 2) are turned ON automatically when this device receives the light.

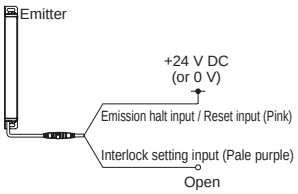

In case that this light curtain is used under automatic reset mode, set the system not to be auto reset by the safety relay unit, etc. (conforming to EN 60204-1)

- It is possible to change the conditions for interlocking by using the handy-controller **SFB-HC** (optional). Refer to instruction manual enclosed with this product for details.

Emission halt function

- This function stops the emission process of the emitter. You can select whether emission is on or halted by means of the connection status for the emission halt input / reset input wire (pink).

Interlock function	Emission halt input / Reset input wire (pink)	Emission halt input	Control output status (OSSD 1, OSSD 2)
Manual reset	Open	Invalid	ON
	When selecting PNP output: Connected to +V When selecting NPN output: Connected to 0 V	Valid	OFF
Automatic reset	Open	Valid	OFF
	When selecting PNP output: Connected to +V When selecting NPN output: Connected to 0 V	Invalid	ON

- During emission halt, the control outputs (OSSD 1, OSSD 2) become OFF status.
- By using this function, malfunction due to extraneous noise or abnormality in the control outputs (OSSD 1, OSSD 2) and the auxiliary output can be determined even from the machinery side.
- Normal operation is restored when the emission halt input / reset input wire (pink) is connected to 0 V or +V (for manual reset: open).

Do not use the emission halt function for the purpose of stopping the machine in which the **SF4B-C** series is installed. Failure to do so could result in death or serious injury.

External device monitoring function

- This is the function for checking whether the external safety relay connected to the control outputs (OSSD 1, OSSD 2) perform normally in accordance with the control outputs (OSSD 1, OSSD 2) or not. Monitor the contacting point "b" of the external safety relay, and if any abnormality such as deposit of the contacting point, etc. is detected, change the status of the light curtain into lockout one, and turn OFF the control outputs (OSSD 1, OSSD 2).

In case of setting the external device monitoring function to enabled

- Connect the external device monitoring input (yellow-green) to the external safety relay connected the control outputs (OSSD 1, OSSD 2).

In case of not using the external device monitoring function

- Connect the external device monitoring input (yellow-green) to the auxiliary output (yellow-green / black). At this time, set the auxiliary output as [negative logic of control outputs (OSSD 1, OSSD 2)] (factory setting).
- The auxiliary output cannot be connected to external devices.

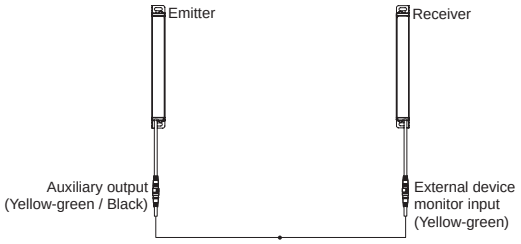

- It is also possible to set the external device monitoring function into invalid by using the handy-controller **SFB-HC** (optional). Refer to instruction manual enclosed with this product for details.

PRECAUTIONS FOR PROPER USE

Refer to the instruction manual for details.
The instruction manual can be downloaded from our website.

Auxiliary output (Non-safety output)

- This light curtain incorporates the auxiliary output (yellow-green / black) for the non-safety output. The auxiliary output is incorporated with the emitter.

Auxiliary output setting	Normal mode			Lockout
	Emission halt	Control outputs (OSSD 1, OSSD 2) status		
		Beam received	Beam interrupted	
Negative logic of OSSD (Factory setting)	ON	OFF	ON	ON

Do not use the auxiliary output for the purpose of stopping the device with **SF4B-C** installed. Failure to do so could result in serious injury or death.

Muting Function (For SF4B-□CA-J05 only)

- Incorrect use of the muting control may cause accidents. Please understand the muting control fully, and use it. As for the muting control, the following international standards define the requirements.
  ISO 13849-1 (EN ISO 13849-1 / JIS B 9705-1)
  IEC 61496-1 (ANSI / UL 61496 / JIS B 9704-1)
  IEC 60204-1 (JIS B 9960-1)
  EN 415-4
  ANSI B11.19-1990
  ANSI/RIA R15.06-1999
- Use the muting control while the machine cycle is not in danger mode. Maintain safety with the other measure while the muting control is activated.
- For the application that the muting control is activated when a workpiece passes through the sensor, place the muting sensor so that the conditions for the muting control cannot be satisfied by intrusion of personnel when the workpiece is passing through the sensor or the workpiece is not passing through it.
- Be sure to check the operation of the muting function before its use.

- This function turns the safety function of this light curtain into disabled temporarily. When the control outputs (OSSD 1, OSSD 2) are ON, this function is available for passing the workpiece through the sensing area of the light curtain without stopping the machinery.
  The muting function becomes valid when all the conditions listed below are satisfied.

(1) The control outputs (OSSD 1, OSSD 2) shall be ON.
(2) The output of the muting sensors A and B shall be changed from OFF (open) to ON. At this time, the time difference occurred by changing the output of the muting sensors A and B into ON status shall be within 0.03 to 3 sec. (Note 1)

- The following devices, photoelectric sensor with semiconductor output, inductive proximity sensor, position switch on N.O. (Normally open) contact, etc. are available for applying to the muting sensor.

Notes: 1) 0 to 3 sec. is allowable by using the handy controller Ver. 2.1 (**SFB-HC**) (optional) and connecting N.O. (Normally Open) type muting sensor to the input A, as well as connecting N.C. (Normally Closed) type muting sensor to the input B.
2) The muting indicator diagnosis function can be set with the handy controller Ver. 2 or later (**SFB-HC**) (optional), but it must be set to invalid. If the muting indicator diagnosis function is set to valid, the muting function cannot be used.

<Muting auxiliary output wiring>

- To trigger a large multi-purpose indicator during muting operation, connect the wiring as follows: As for lead wires other than below, perform wiring depending on your application.

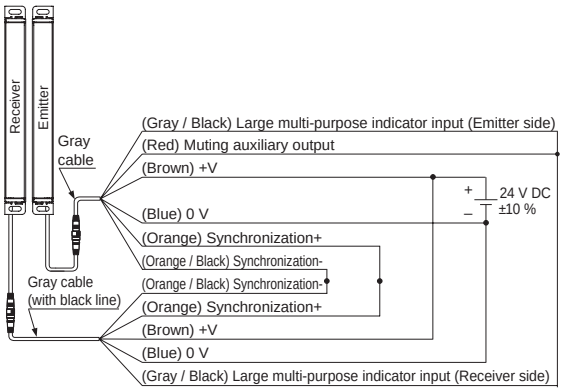

Override function (For SF4B-□CA-J05 only)

- This function sets the safety function of this light curtain enabled forcibly. When using the muting function, the override function can be used to start the machinery at times such as when the control outputs (OSSD 1 and OSSD 2) are OFF or when the muting sensors are ON when the line is to be started. The override function becomes valid when all the conditions listed below are satisfied.

(1) The signal shall be input to either muting sensor A, B, or A and B.
(2) The override input (yellow) shall be short-circuited to 0 V or +V, and the emission halt input / reset input (pink) shall be opened. (3 sec. continuously)

If one of the two conditions above becomes invalid or timing exceeds 60 sec. (Note 1), the override function becomes invalid.

- The override function only operates when the interlock function is disabled (automatic reset).

Notes: 1) By using handy-controller (**SFB-HC**) (optional) Ver.2.1 or later, a change between 60 and 600 sec. by 10 sec. per unit is possible.
2) The muting indicator diagnosis function can be set with the handy controller Ver. 2 or later (**SFB-HC**) (optional), but it must be set to invalid. If the muting indicator diagnosis function is set to valid, the muting function cannot be used.
3) The override function only operates when the interlock function is disabled (automatic reset).

- Make sure manually to operate system for starting override function. Furthermore, the system shall be placed in area where all over the dangerous zone shall be comprehend and out side of the dangerous zone.
- Using override function, make sure that there exist no operator in the dangerous zone, which may result in death or serious injury.

PRECAUTIONS FOR PROPER USE

Refer to the instruction manual for details.
The instruction manual can be downloaded from our website.

Others

- Do not use during the initial transient time (2 sec.) after the power supply is switched on.
- Avoid dust, dirt and steam.
- Take care that the light curtain does not come in direct contact with water, oil, grease, or organic solvents, such as, thinner, etc.
- Take care that the light curtain is not directly exposed to fluorescent light from a rapid-starter lamp or a high frequency lighting device, as it may affect the sensing performance.

- When this device is used in the "PSDI mode", an appropriate control circuit must be configured between this device and the machinery. For details, be sure to refer to the standards or regulations applicable in each region or country.
- To use this product in the U.S.A., refer to OSHA 1910. 212 and OSHA 1910. 217 for installation, and in Europe, refer to EN 999 as well. Observe your national and local requirements before installing this product.

- This catalog is a guide to select a suitable product. Be sure to read instruction manual attached to the product prior to its use.
- Both emitter and receiver are combined adjusted on factory setting, please apply both emitter and receiver with the same serial No. The serial No. is indicated on the plates of both emitter and receiver. (Indicated under model No.)

- Make sure to carry out the test run before regular operation.
- Do not use this product with machinery that cannot be stopped immediately during the operating cycle by means of an emergency stop system.

Sensing area

- Make sure to install this product such that any part of the human body must pass through its sensing area in order to reach the dangerous parts of the machinery. Furthermore, ensure that some part of the operator's body always remains in the sensing area when operation is done with the dangerous parts of the machine. If the human body is not detected, there is a danger of serious injury or death.
- Do not use any reflection type or recursive reflection type arrangement.
- Multiple receivers (emitters) cannot be connected to one emitter (receiver).

Example of correct installation

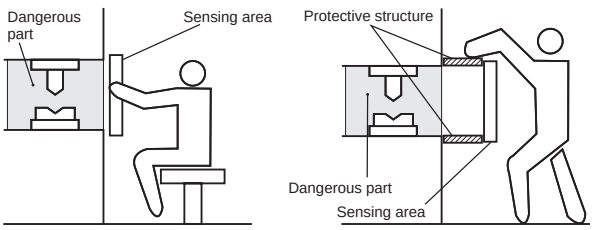

Example of incorrect installation

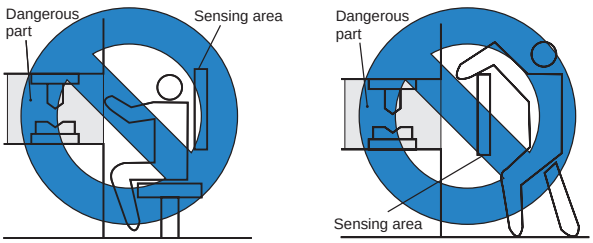

Influence of reflective surfaces

Install the light curtain by considering the effect of nearby reflective surfaces, and take countermeasures such as painting, masking, or changing the material of the reflective surface, etc. Failure to do so may cause the light curtain not to detect, resulting in serious body injury or death.

- Install this device at a distance of at least A (m) (given below) away from reflective surfaces such as metal walls, floors, ceilings, workpiece, covers, panels or glass surfaces.

Side view

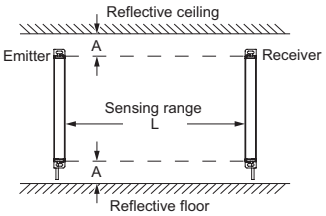

Top view

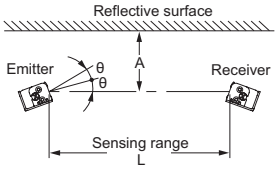

Distance between emitter and receiver (Setting distance L)	Allowable installation distance A
0.3 to 3 m 0.984 to 9.843 ft	0.16 m 0.525 ft
3 to 7 m 9.843 to 22.966 ft	L/2 × tanθ = L/2 × 0.105 (m) 0.344 (ft) (θ = 3°)

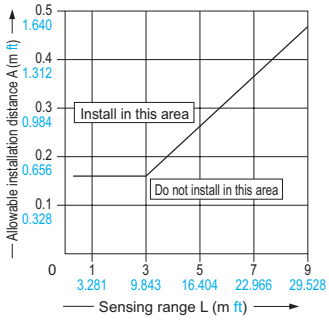

Note: The effective aperture angle for this device is ±2.5° or less (when L > 3 m 9.843 ft) as required by IEC 61496-2, ANSI/UL 61496-2. However, install this device away from reflective surfaces considering an effective aperture angle of ±3° to take care of beam misalignment, etc. during installation.

Handy-controller

This device enables to set each function using the handy-controller **SFB-HC** (optional). Among the functions, the contents related to the safety distance such as the size of the minimum sensing object and response time are varied depending on the setting condition. When setting each function, re-calculate the safety distance, and make enough space larger than the calculated safety distance. Failure to do so might cause the accident that the device cannot stop quickly before reaching the dangerous area of the machinery, resulting in the serious injury or death.

- Refer to the instruction manual enclosed with the handy-controller for details of the function settings for using handy-controller **SFB-HC** (optional).

PRECAUTIONS FOR PROPER USE

Refer to the instruction manual for details.
The instruction manual can be downloaded from our website.

Safety distance

- Calculate the safety distance correctly, and always maintain a distance which is equal to or greater than the safety distance, between the sensing area of this light curtain and the dangerous parts of the machinery. (Please check the latest standards for the equation.) If the safety distance is miscalculated or if sufficient distance is not maintained, there is a danger of serious injury or death.
- Before designing the system, refer to the relevant standards of the region where this device is to be used and then install this device.

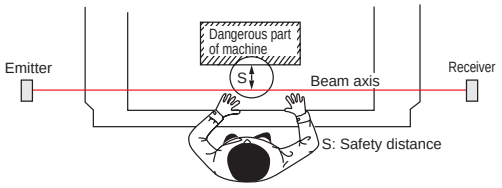

The sizes of the minimum sensing objects for this device vary depending on whether or not the floating blanking function is being used. Calculate the safety distance with the proper size of the minimum sensing object and appropriate equation.

Size of minimum sensing object when applying floating blanking function

	Invalid	Setting (Note)		
		1 beam channel	2 beam channels	3 beam channels
SF4B-H□C(A-J05) (Min. sensing object ø25 mm ø0.984 in)	ø25 mm ø0.984 in	ø45 mm ø1.772 in	ø65 mm ø2.559 in	ø85 mm ø3.346 in
SF4B-H□C(A-J05) (Min. sensing object ø45 mm ø1.772 in)	ø45 mm ø1.772 in	ø85 mm ø3.346 in	ø125 mm ø4.921 in	ø165 mm ø6.496 in

Note: Refer to P. 501 for details of the floating blanking function.

- Safety distance is calculated based on the following equation when a person moves perpendicular (normal intrusion) to the sensing area of the light curtain.
  In case the intrusion direction is not perpendicular to the sensing area, be sure to refer to the relevant standard (regional standard, specification of the machine, etc.) for details of the calculation.

For use in Europe (EU) (as EN 999) (Also applicable to ISO 13855 / JIS B 9715)

For intrusion direction perpendicular to the sensing area
<In the case that the minimum sensing object is ø40 mm ø1.575 in or less>

- Equation ① $S = K \times T + C$
  S: Safety distance (mm)
  Minimum required distance between the sensing area surface and the dangerous parts of the machine
  K: Intrusion velocity of operator's body or object (mm/sec.)
  Taken as 2,000 (mm/sec.) for calculation
  T: Response time of total equipment (sec.)
  $T = T_m + T_{SF4B}$
  T_m: Maximum halting time of machinery (sec.)
  T_{SF4B}: Response time of the **SF4B-C** series (sec.)
  C: Additional distance calculated from the size of the minimum sensing object of the **SF4B-C** series (mm)
  However, the value of "C" cannot be under 0.
  $C = 8 \times (d - 14)$
  d: Minimum sensing object diameter (mm)

- For calculating the safety distance "S", there are the following five cases.
  First calculate by substituting the value K = 2,000 (mm/sec.) in the equation above. Then, classify the obtained value of "S" into three cases, 1) S < 100, 2) 100 ≤ S ≤ 500, and 3) S > 500. For Case 3) S > 500, recalculate by substituting the value K = 1,600 (mm/sec.). After that, classify the calculation result into two cases,
  4) S ≤ 500 and 5) S > 500. For details, refer to the instruction manual enclosed with this product.
- When this product is used in the "PSDI mode", an appropriate safety distance "S" must be calculated. For details, be sure to refer to the standards or regulations applicable in each region or country.

<In the case that the minimum sensing object is ø40 mm ø1.575 in or more>

- Equation ① $S = K \times T + C$
  S: Safety distance (mm)
  K: Intrusion velocity of operator's body or object (mm/sec.)
  Taken as 1,600 (mm/sec.) for calculation
  T: Response time of total equipment (sec.)
  $T = T_m + T_{SF4B}$
  T_m: Maximum halting time of machinery (sec.)
  T_{SF4B}: Response time of the **SF4B-C** series (sec.)
  C: Additional distance calculated from the size of the minimum sensing object of the **SF4B-C** series (mm)
  C = 850 (mm) (Constant)

For use in the United States of America (as per ANSI/RIA 15.06)

- Equation ② $S = K \times (T_S + T_C + T_{SF4B} + T_{bm}) + D_{pf}$
  S: Safety distance (mm)
  Minimum required distance between the sensing area surface and the dangerous parts of the machine
  K: Intrusion velocity {Recommended value in OSHA is 63 (inch/s) [≈ 1,600 (mm/sec.)] }
  ANSI/RIA 15.06 does not define the intrusion speed "K". When determining K, consider possible factors including physical ability of operators.
  T_S: Halting time calculated from the operation time of the control element (air valve, etc.) (sec.)
  T_C: Maximum response time of the control circuit required for functioning the brake (sec.)
  T_{SF4B}: Response time of the **SF4B-C** series (sec.)
  T_{bm}: Additional halting time tolerance for the brake monitor (sec.)
  The following equation holds when the machine is equipped with a brake monitor.
  $T_{bm} = T_a - (T_S + T_C)$
  T_a: Setting time of brake monitor (sec.)
  When the machine is not equipped with a brake monitor, it is recommended that 20 % or more of (T_S + T_C) is taken as additional halting time.
  D_{pf}: Additional distance calculated from the size of the minimum sensing object of the device (mm)
  SF4B-H□C(A-J05): D_{pf} = 61.2 mm 2.409 in
  SF4B-A□C(A-J05): D_{pf} = 129.2 mm 5.087 in

  $D_{pf} = 3.4 \times (d - 0.276)$ (inch)
  $\approx 3.4 \times (d - 7)$ (mm)
  d: Minimum sensing object diameter 0.985 (inch) ≈ 25 (mm) [**SF4B-H□C(A-J05)**]
  Minimum sensing object diameter 1.772 (inch) ≈ 45 (mm) [**SF4B-A□C(A-J05)**]

- When the floating blanking function is applied, the minimum sensing object becomes large. According to ANSI/RIA 15.06,
  Dpf = 900 mm (3 ft) when d > 64 mm (2.5 inches).

DIMENSIONS (Unit: mm in)

The CAD data in the dimensions can be downloaded from our website.

SF4B-□CA-J05 SF4B-□C

Light curtain

Assembly dimensions

The figure depicts rear mounting using the standard mounting bracket **MS-SF4BC-1**(optional) and the intermediate supporting bracket for standard mounting bracket **MS-SF4BC-5**(optional).

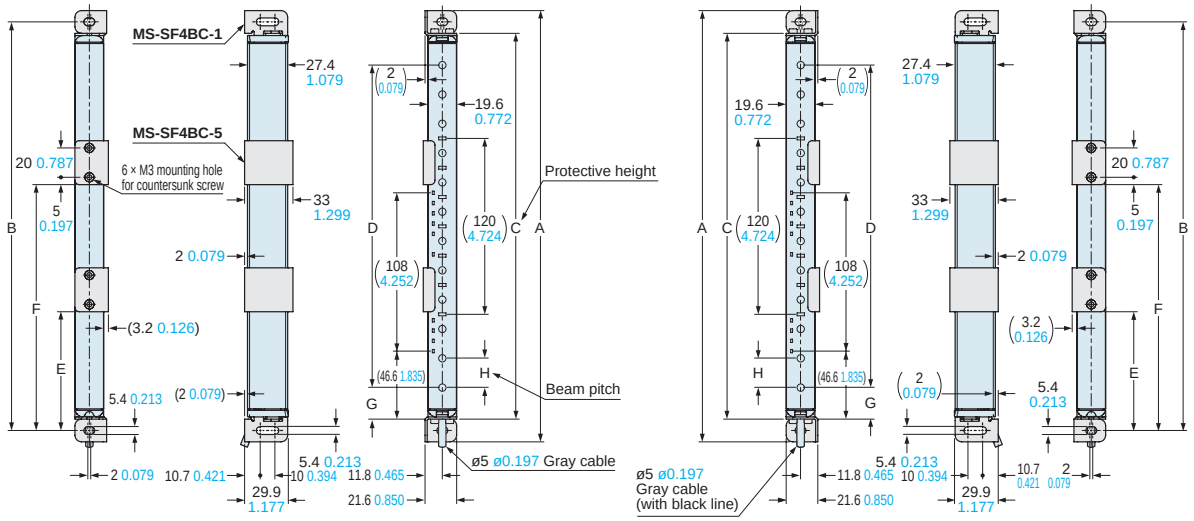

<Connector of the pigtailed type (with muting function) SF4B-□CA-J05>

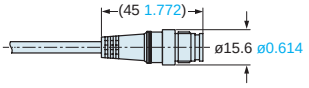

Model No.		A	B	C	D		E	F
					SF4B-H□C(A-J05)	SF4B-A□C(A-J05)		
SF4B-H12C(A-J05)	———	294.4 11.591	279 10.984	263.4 10.370	220 8.661	—	—	—
SF4B-H16C(A-J05)	SF4B-A8C(A-J05)	374.4 14.740	359 14.134	343.4 13.520	300 11.811	280 11.024	—	—
SF4B-H20C(A-J05)	———	454.4 17.890	439 17.283	423.4 16.669	380 14.961	—	—	—
SF4B-H24C(A-J05)	SF4B-A12C(A-J05)	534.4 21.039	519 20.433	503.4 19.819	460 18.110	440 17.323	—	—
SF4B-H28C(A-J05)	———	614.4 24.189	599 23.583	583.4 22.969	540 21.260	—	—	—
SF4B-H32C(A-J05)	SF4B-A16C(A-J05)	694.4 27.339	679 26.732	663.4 26.118	620 24.409	600 23.622	—	—
SF4B-H36C(A-J05)	———	774.4 30.488	759 29.882	743.4 29.268	700 27.559	—	—	—
SF4B-H40C(A-J05)	SF4B-A20C(A-J05)	854.4 33.638	839 33.031	823.4 32.417	780 30.709	760 29.921	395 15.551	—
SF4B-H48C(A-J05)	SF4B-A24C(A-J05)	1,014.4 39.937	999 39.331	983.4 38.717	940 37.008	920 36.220	475 18.701	—
SF4B-H56C(A-J05)	SF4B-A28C(A-J05)	1,174.4 46.236	1,159 45.630	1,143.4 45.016	1,100 43.307	1,080 42.520	555 21.850	—
SF4B-H64C(A-J05)	SF4B-A32C(A-J05)	1,334.4 52.535	1,319 51.929	1,303.4 51.315	1,260 49.606	1,240 48.819	415 16.339	854 33.622
SF4B-H72C(A-J05)	SF4B-A36C(A-J05)	1,494.4 58.835	1,479 58.228	1,463.4 57.614	1,420 55.906	1,400 55.118	468 18.425	961 37.835
SF4B-H80C(A-J05)	SF4B-A40C(A-J05)	1,654.4 65.134	1,639 64.528	1,623.4 63.913	1,580 62.205	1,560 61.417	521 20.512	1,068 42.047
SF4B-H88C(A-J05)	SF4B-A44C(A-J05)	1,814.4 71.433	1,799 70.827	1,783.4 70.212	1,740 68.504	1,720 67.716	574 22.598	1,175 46.260
SF4B-H96C(A-J05)	SF4B-A48C(A-J05)	1,974.4 77.732	1,959 77.126	1,943.4 76.512	1,900 74.803	1,880 74.016	627 24.685	1,282 50.472

Model No.	G	H
SF4B-H□C(A-J05)	21.7 0.854	20 0.787
SF4B-A□C(A-J05)	41.7 1.642	40 1.575

DIMENSIONS (Unit: mm in)

The CAD data in the dimensions can be downloaded from our website.

SF4B-□CA-J05 SF4B-□C Light curtain

Assembly dimensions

The figure depicts side mounting using the standard mounting bracket **MS-SF4BC-1**(optional) and the intermediate supporting bracket for standard mounting bracket **MS-SF4BC-5**(optional).

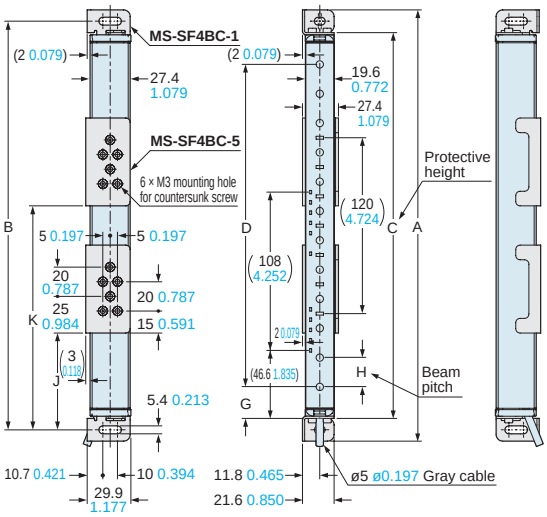

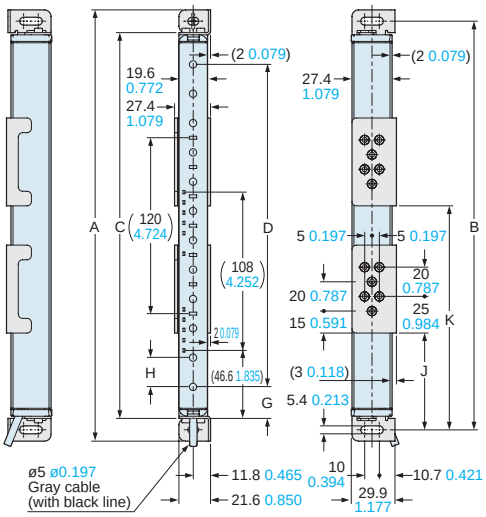

<Connector of the pigtailed type (with muting function) SF4B-□CA-J05>

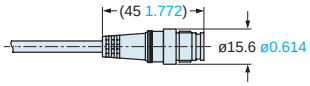

Model No.		A	B	C	D		J	K
					SF4B-H□C(A-J05)	SF4B-A□C(A-J05)		
SF4B-H12C(A-J05)	———	294.4 11.591	279 10.984	263.4 10.370	220 8.661	—	—	—
SF4B-H16C(A-J05)	SF4B-A8C(A-J05)	374.4 14.740	359 14.134	343.4 13.520	300 11.811	280 11.024	—	—
SF4B-H20C(A-J05)	———	454.4 17.890	439 17.283	423.4 16.669	380 14.961	—	—	—
SF4B-H24C(A-J05)	SF4B-A12C(A-J05)	534.4 21.039	519 20.433	503.4 19.819	460 18.110	440 17.323	—	—
SF4B-H28C(A-J05)	———	614.4 24.189	599 23.583	583.4 22.969	540 21.260	—	—	—
SF4B-H32C(A-J05)	SF4B-A16C(A-J05)	694.4 27.339	679 26.732	663.4 26.118	620 24.409	600 23.622	—	—
SF4B-H36C(A-J05)	———	774.4 30.488	759 29.882	743.4 29.268	700 27.559	—	—	—
SF4B-H40C(A-J05)	SF4B-A20C(A-J05)	854.4 33.638	839 33.031	823.4 32.417	780 30.709	760 29.921	390 15.354	—
SF4B-H48C(A-J05)	SF4B-A24C(A-J05)	1,014.4 39.937	999 39.331	983.4 38.717	940 37.008	920 36.220	470 18.504	—
SF4B-H56C(A-J05)	SF4B-A28C(A-J05)	1,174.4 46.236	1,159 45.630	1,143.4 45.016	1,100 43.307	1,080 42.520	550 21.654	—
SF4B-H64C(A-J05)	SF4B-A32C(A-J05)	1,334.4 52.535	1,319 51.929	1,303.4 51.315	1,260 49.606	1,240 48.819	410 16.142	849 33.425
SF4B-H72C(A-J05)	SF4B-A36C(A-J05)	1,494.4 58.835	1,479 58.228	1,463.4 57.614	1,420 55.906	1,400 55.118	463 18.228	956 37.638
SF4B-H80C(A-J05)	SF4B-A40C(A-J05)	1,654.4 65.134	1,639 64.528	1,623.4 63.913	1,580 62.205	1,560 61.417	516 20.315	1,063 41.850
SF4B-H88C(A-J05)	SF4B-A44C(A-J05)	1,814.4 71.433	1,799 70.827	1,783.4 70.212	1,740 68.504	1,720 67.716	569 22.402	1,170 46.063
SF4B-H96C(A-J05)	SF4B-A48C(A-J05)	1,974.4 77.732	1,959 77.126	1,943.4 76.512	1,900 74.803	1,880 74.016	622 24.488	1,277 50.275

Model No.	G	H
SF4B-H□C(A-J05)	21.7 0.854	20 0.787
SF4B-A□C(A-J05)	41.7 1.642	40 1.575

DIMENSIONS (Unit: mm in)

The CAD data in the dimensions can be downloaded from our website.

SF4B-□CA-J05 SF4B-□C

Light curtain

Assembly dimensions

The figure depicts rear mounting using the rear utility mounting bracket **MS-SF4BC-2**(optional) and the intermediate supporting bracket for utility mounting bracket **MS-SF4BC-4**(optional).

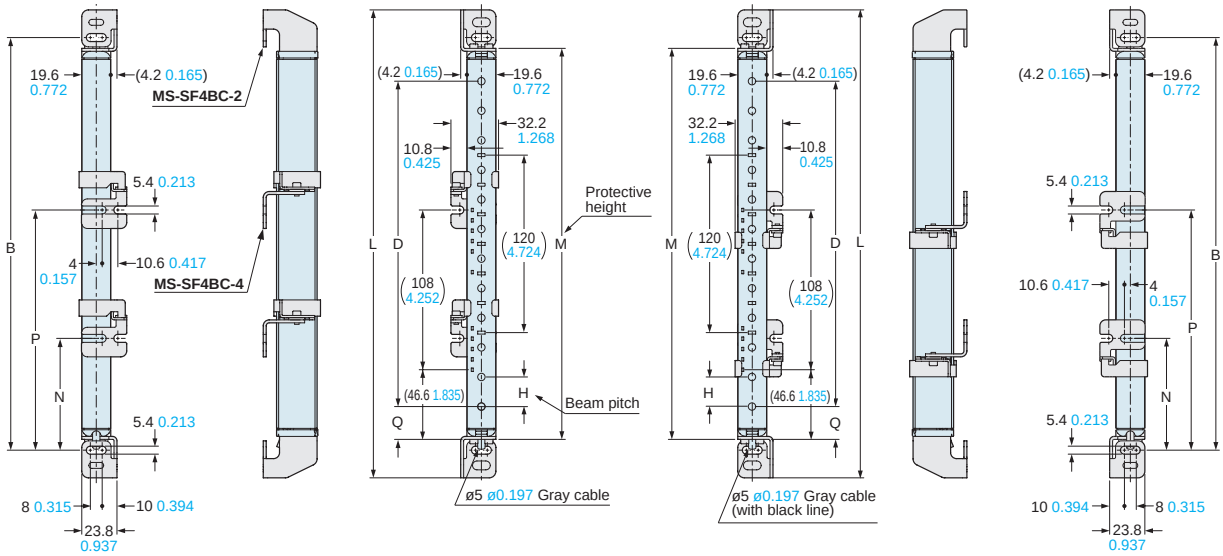

Emitter

Receiver

<Connector of the pigtailed type (with muting function) SF4B-□CA-J05>

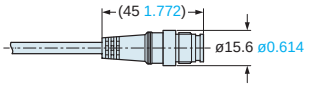

Model No.		B	D		L	M	N	P
			SF4B-H□C(A-J05)	SF4B-A□C(A-J05)				
SF4B-H12C(A-J05)	———	279 10.984	220 8.661	—	316.4 12.457	264.4 10.409	—	—
SF4B-H16C(A-J05)	SF4B-A8C(A-J05)	359 14.134	300 11.811	280 11.024	396.4 15.606	344.4 13.559	—	—
SF4B-H20C(A-J05)	———	439 17.283	380 14.961	—	476.4 18.756	424.4 16.709	—	—
SF4B-H24C(A-J05)	SF4B-A12C(A-J05)	519 20.433	460 18.110	440 17.323	556.4 21.906	504.4 19.858	—	—
SF4B-H28C(A-J05)	———	599 23.583	540 21.260	—	636.4 25.055	584.4 23.008	—	—
SF4B-H32C(A-J05)	SF4B-A16C(A-J05)	679 26.732	620 24.409	600 23.622	716.4 28.205	664.4 26.157	—	—
SF4B-H36C(A-J05)	———	759 29.882	700 27.559	—	796.4 31.354	744.4 29.307	—	—
SF4B-H40C(A-J05)	SF4B-A20C(A-J05)	839 33.031	780 30.709	760 29.921	876.4 34.504	824.4 32.457	399.5 15.728	—
SF4B-H48C(A-J05)	SF4B-A24C(A-J05)	999 39.331	940 37.008	920 36.220	1,036.4 40.803	984.4 38.756	479.5 18.878	—
SF4B-H56C(A-J05)	SF4B-A28C(A-J05)	1,159 45.630	1,100 43.307	1,080 42.520	1,196.4 47.102	1,144.4 45.055	559.5 22.028	—
SF4B-H64C(A-J05)	SF4B-A32C(A-J05)	1,319 51.929	1,260 49.606	1,240 48.819	1,356.4 53.402	1,304.4 51.354	419.5 16.516	858.5 33.799
SF4B-H72C(A-J05)	SF4B-A36C(A-J05)	1,479 58.228	1,420 55.906	1,400 55.118	1,516.4 59.701	1,464.4 57.654	472.5 18.602	965.5 38.012
SF4B-H80C(A-J05)	SF4B-A40C(A-J05)	1,639 64.528	1,580 62.205	1,560 61.417	1,676.4 66.000	1,624.4 63.953	525.5 20.689	1,072.5 42.224
SF4B-H88C(A-J05)	SF4B-A44C(A-J05)	1,799 70.827	1,740 68.504	1,720 67.716	1,836.4 72.299	1,784.4 70.252	578.5 22.776	1,179.5 46.437
SF4B-H96C(A-J05)	SF4B-A48C(A-J05)	1,959 77.126	1,900 74.803	1,880 74.016	1,996.4 78.598	1,944.4 76.551	631.5 24.862	1,286.5 50.650

Model No.	H	Q
SF4B-H□C(A-J05)	20 0.787	22.2 0.874
SF4B-A□C(A-J05)	40 1.575	42.2 1.661

DIMENSIONS (Unit: mm in)

The CAD data in the dimensions can be downloaded from our website.

SF4B-□CA-J05 SF4B-□C

Light curtain

Assembly dimensions

The figure depicts space-saving mounting using the rear utility mounting bracket **MS-SF4BC-2**(optional) and the intermediate supporting bracket for utility mounting bracket **MS-SF4BC-4**(optional).

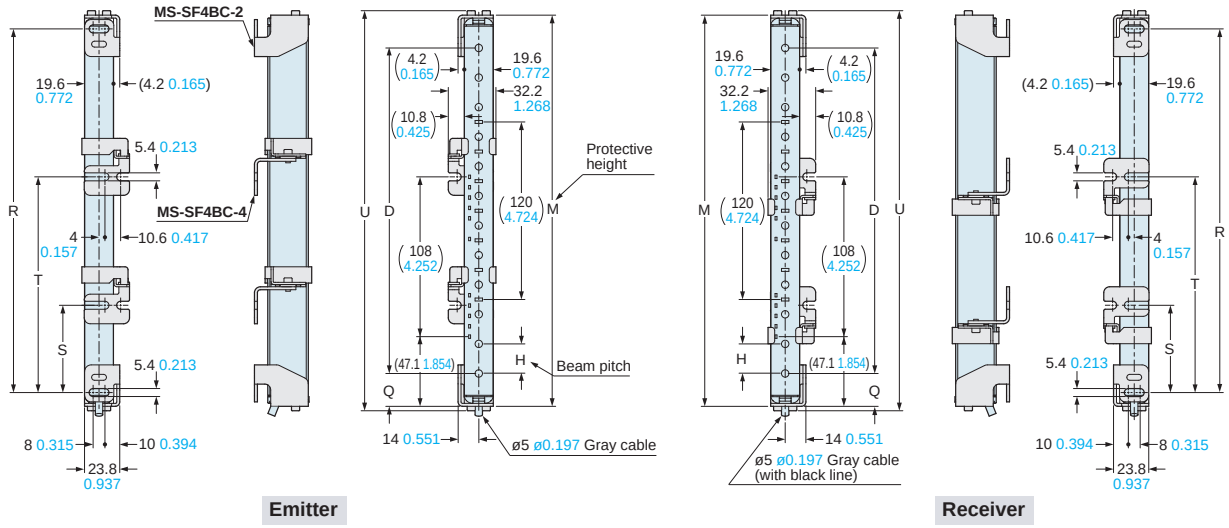

<Connector of the pigtailed type (with muting function) SF4B-□CA-J05>

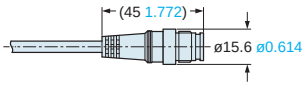

Model No.		D		M	R	S	T	U
		SF4B-H□C(A-J05)	SF4B-A□C(A-J05)					
SF4B-H12C(A-J05)	———	220 8.661	—	264.4 10.409	245.8 9.677	—	—	270.4 10.646
SF4B-H16C(A-J05)	SF4B-A8C(A-J05)	300 11.811	280 11.024	344.4 13.559	325.8 12.827	—	—	350.4 13.795
SF4B-H20C(A-J05)	———	380 14.961	—	424.4 16.709	405.8 17.748	—	—	430.4 16.945
SF4B-H24C(A-J05)	SF4B-A12C(A-J05)	460 18.110	440 17.323	504.4 19.858	485.8 19.126	—	—	510.4 20.094
SF4B-H28C(A-J05)	———	540 21.260	—	584.4 23.008	565.8 22.276	—	—	590.4 23.244
SF4B-H32C(A-J05)	SF4B-A16C(A-J05)	620 24.409	600 23.622	664.4 26.157	645.8 25.425	—	—	670.4 26.394
SF4B-H36C(A-J05)	———	700 27.559	—	744.4 29.307	725.8 28.575	—	—	750.4 29.543
SF4B-H40C(A-J05)	SF4B-A20C(A-J05)	780 30.709	760 29.921	824.4 32.457	805.8 31.724	382.9 15.075	—	830.4 32.693
SF4B-H48C(A-J05)	SF4B-A24C(A-J05)	940 37.008	920 36.220	984.4 38.756	965.8 38.024	462.9 18.224	—	990.4 38.992
SF4B-H56C(A-J05)	SF4B-A28C(A-J05)	1,100 43.307	1,080 42.520	1,144.4 45.055	1,125.8 44.323	542.9 21.374	—	1,150.4 45.291
SF4B-H64C(A-J05)	SF4B-A32C(A-J05)	1,260 49.606	1,240 48.819	1,304.4 51.354	1,285.8 50.622	402.9 15.862	841.9 33.146	1,310.4 51.590
SF4B-H72C(A-J05)	SF4B-A36C(A-J05)	1,420 55.906	1,400 55.118	1,464.4 57.654	1,445.8 56.921	455.9 17.949	948.9 37.358	1,470.4 57.890
SF4B-H80C(A-J05)	SF4B-A40C(A-J05)	1,580 62.205	1,560 61.417	1,624.4 63.953	1,605.8 63.220	508.9 20.035	1,055.9 41.571	1,630.4 64.189
SF4B-H88C(A-J05)	SF4B-A44C(A-J05)	1,740 68.504	1,720 67.716	1,784.4 70.252	1,765.8 69.520	561.9 22.122	1,162.9 45.783	1,790.4 70.488
SF4B-H96C(A-J05)	SF4B-A48C(A-J05)	1,900 74.803	1,880 74.016	1,944.4 76.551	1,925.8 75.819	614.9 24.209	1,269.9 49.996	1,950.4 76.787

Model No.	H	Q
SF4B-H□C(A-J05)	20 0.787	22.2 0.874
SF4B-A□C(A-J05)	40 1.575	42.2 1.661

DIMENSIONS (Unit: mm in)

The CAD data in the dimensions can be downloaded from our website.

SF4B-□CA-J05 SF4B-□C Light curtain

Assembly dimensions

The figure depicts side mounting using the side utility mounting bracket **MS-SF4BC-3**(optional) and the intermediate supporting bracket for utility mounting bracket **MS-SF4BC-4**(optional).

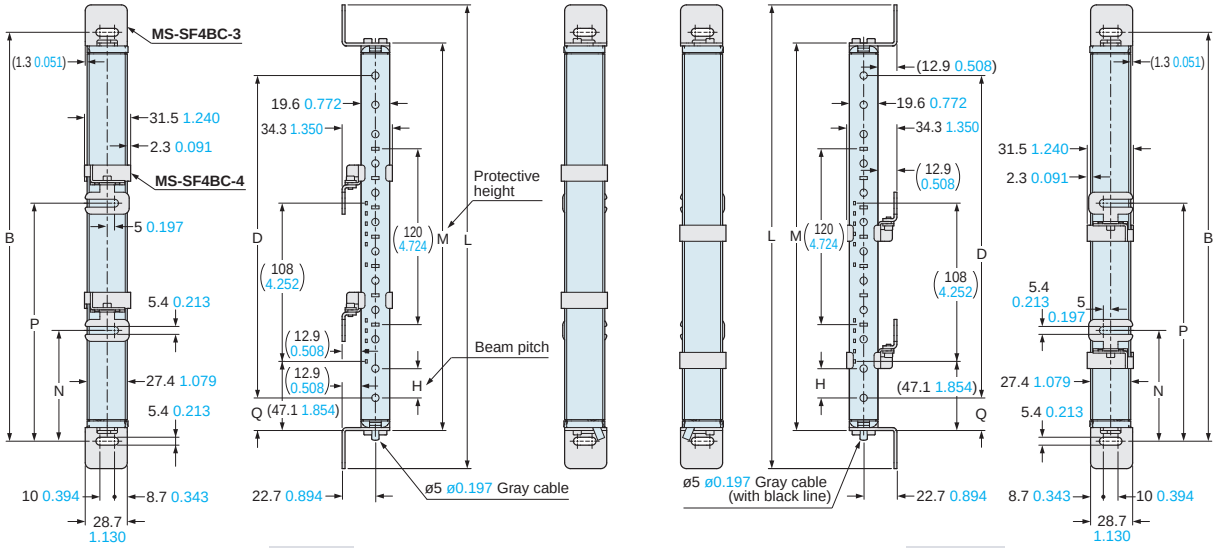

<Connector of the pigtailed type (with muting function) SF4B-□CA-J05>

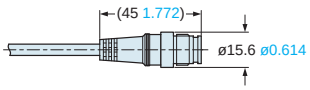

Model No.		B	D		L	M	N	P
			SF4B-H□C(A-J05)	SF4B-A□C(A-J05)				
SF4B-H12C(A-J05)	———	279 10.984	220 8.661	—	316.4 12.457	264.4 10.409	—	—
SF4B-H16C(A-J05)	SF4B-A8C(A-J05)	359 14.134	300 11.811	280 11.024	396.4 15.606	344.4 13.559	—	—
SF4B-H20C(A-J05)	———	439 17.283	380 14.961	—	476.4 18.756	424.4 16.709	—	—
SF4B-H24C(A-J05)	SF4B-A12C(A-J05)	519 20.433	460 18.110	440 17.323	556.4 21.906	504.4 19.858	—	—
SF4B-H28C(A-J05)	———	599 23.583	540 21.260	—	636.4 25.055	584.4 23.008	—	—
SF4B-H32C(A-J05)	SF4B-A16C(A-J05)	679 26.732	620 24.409	600 23.622	716.4 28.205	664.4 26.157	—	—
SF4B-H36C(A-J05)	———	759 29.882	700 27.559	—	796.4 31.354	744.4 29.307	—	—
SF4B-H40C(A-J05)	SF4B-A20C(A-J05)	839 33.031	780 30.709	760 29.921	876.4 34.504	824.4 32.457	399.5 15.728	—
SF4B-H48C(A-J05)	SF4B-A24C(A-J05)	999 39.331	940 37.008	920 36.220	1,036.4 40.803	984.4 38.756	479.5 18.878	—
SF4B-H56C(A-J05)	SF4B-A28C(A-J05)	1,159 45.630	1,100 43.307	1,080 42.520	1,196.4 47.102	1,144.4 45.055	559.5 22.028	—
SF4B-H64C(A-J05)	SF4B-A32C(A-J05)	1,319 51.929	1,260 49.606	1,240 48.819	1,356.4 53.402	1,304.4 51.354	419.5 16.516	858.5 33.799
SF4B-H72C(A-J05)	SF4B-A36C(A-J05)	1,479 58.228	1,420 55.906	1,400 55.118	1,516.4 59.701	1,464.4 57.654	472.5 18.602	965.5 38.012
SF4B-H80C(A-J05)	SF4B-A40C(A-J05)	1,639 64.528	1,580 62.205	1,560 61.417	1,676.4 66.000	1,624.4 63.953	525.5 20.689	1,072.5 42.224
SF4B-H88C(A-J05)	SF4B-A44C(A-J05)	1,799 70.827	1,740 68.504	1,720 67.716	1,836.4 72.299	1,784.4 70.252	578.5 22.776	1,179.5 46.437
SF4B-H96C(A-J05)	SF4B-A48C(A-J05)	1,959 77.126	1,900 74.803	1,880 74.016	1,996.4 78.598	1,944.4 76.551	631.5 24.862	1,286.5 50.650

Model No.	H	Q
SF4B-H□C(A-J05)	20 0.787	22.2 0.874
SF4B-A□C(A-J05)	40 1.575	42.2 1.661

DIMENSIONS (Unit: mm in)

The CAD data in the dimensions can be downloaded from our website.

SF4B-□CA-J05 SF4B-□C

Light curtain

Assembly dimensions

The figure depicts space-saving mounting using the side utility mounting bracket **MS-SF4BC-3**(optional) and the intermediate supporting bracket for utility mounting bracket **MS-SF4BC-4**(optional).

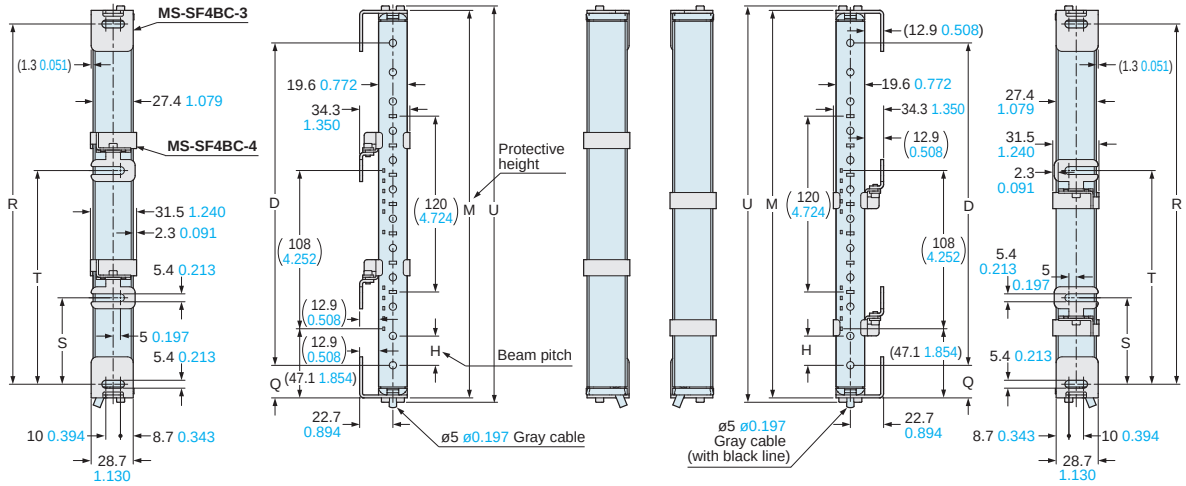

<Connector of the pigtailed type (with muting function) SF4B-□CA-J05>

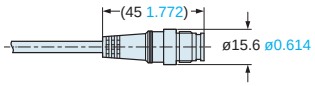

Model No.		D		M	R	S	T	U
		SF4B-H□C(A-J05)	SF4B-A□C(A-J05)					
SF4B-H12C(A-J05)	———	220 8.661	—	264.4 10.409	245.8 9.677	—	—	270.4 10.646
SF4B-H16C(A-J05)	SF4B-A8C(A-J05)	300 11.811	280 11.024	344.4 13.559	325.8 12.827	—	—	350.4 13.795
SF4B-H20C(A-J05)	———	380 14.961	—	424.4 16.709	405.8 17.748	—	—	430.4 16.945
SF4B-H24C(A-J05)	SF4B-A12C(A-J05)	460 18.110	440 17.323	504.4 19.858	485.8 19.126	—	—	510.4 20.094
SF4B-H28C(A-J05)	———	540 21.260	—	584.4 23.008	565.8 22.276	—	—	590.4 23.244
SF4B-H32C(A-J05)	SF4B-A16C(A-J05)	620 24.409	600 23.622	664.4 26.157	645.8 25.425	—	—	670.4 26.394
SF4B-H36C(A-J05)	———	700 27.559	—	744.4 29.307	725.8 28.575	—	—	750.4 29.543
SF4B-H40C(A-J05)	SF4B-A20C(A-J05)	780 30.709	760 29.921	824.4 32.457	805.8 31.724	382.9 15.075	—	830.4 32.693
SF4B-H48C(A-J05)	SF4B-A24C(A-J05)	940 37.008	920 36.220	984.4 38.756	965.8 38.024	462.9 18.224	—	990.4 38.992
SF4B-H56C(A-J05)	SF4B-A28C(A-J05)	1,100 43.307	1,080 42.520	1,144.4 45.055	1,125.8 44.323	542.9 21.374	—	1,150.4 45.291
SF4B-H64C(A-J05)	SF4B-A32C(A-J05)	1,260 49.606	1,240 48.819	1,304.4 51.354	1,285.8 50.622	402.9 15.862	841.9 33.146	1,310.4 51.590
SF4B-H72C(A-J05)	SF4B-A36C(A-J05)	1,420 55.906	1,400 55.118	1,464.4 57.654	1,445.8 56.921	455.9 17.949	948.9 37.358	1,470.4 57.890
SF4B-H80C(A-J05)	SF4B-A40C(A-J05)	1,580 62.205	1,560 61.417	1,624.4 63.953	1,605.8 63.220	508.9 20.035	1,055.9 41.571	1,630.4 64.189
SF4B-H88C(A-J05)	SF4B-A44C(A-J05)	1,740 68.504	1,720 67.716	1,784.4 70.252	1,765.8 69.520	561.9 22.122	1,162.9 45.783	1,790.4 70.488
SF4B-H96C(A-J05)	SF4B-A48C(A-J05)	1,900 74.803	1,880 74.016	1,944.4 76.551	1,925.8 75.819	614.9 24.209	1,269.9 49.996	1,950.4 76.787

Model No.	H	Q
SF4B-H□C(A-J05)	20 0.787	22.2 0.874
SF4B-A□C(A-J05)	40 1.575	42.2 1.661

DIMENSIONS (Unit: mm in)

The CAD data in the dimensions can be downloaded from our website.

SF4B-□CA-J05 SF4B-□C

Light curtain

Assembly dimensions

The figure depicts side mounting using the side mounting bracket **MS-SF4BC-6**(optional) and the intermediate supporting bracket for side mounting bracket **MS-SF4BC-7**(optional).

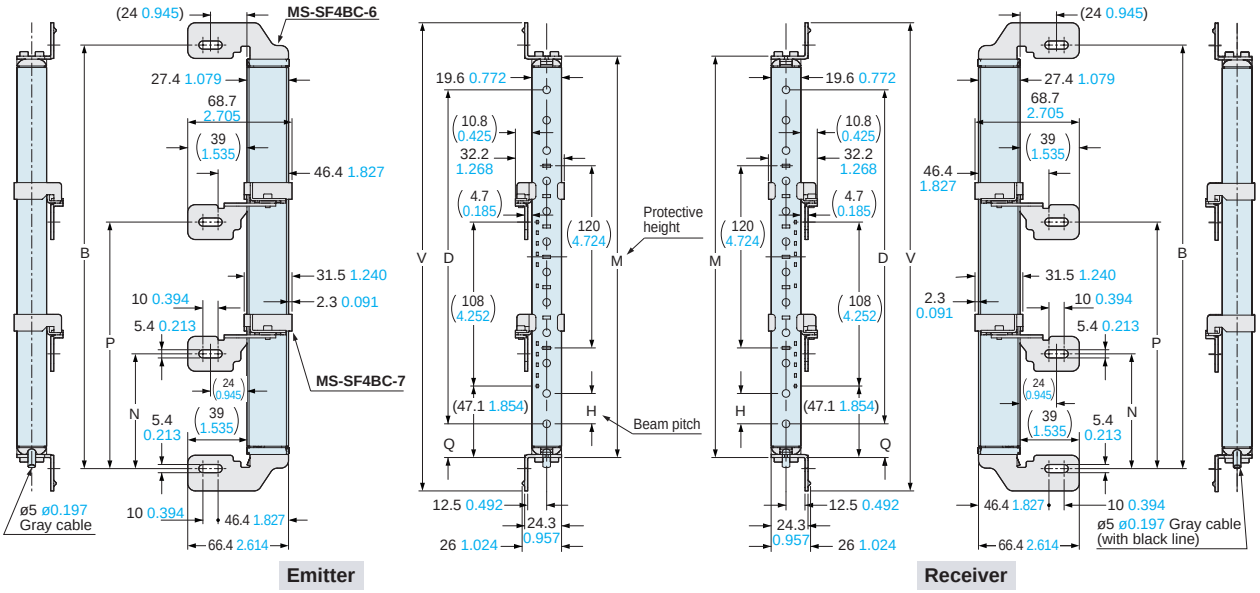

<Connector of the pigtailed type (with muting function) SF4B-□CA-J05>

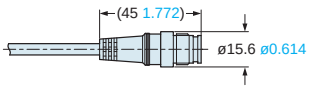

Model No.		B	D		M	N	P	V
			SF4B-H□C(A-J05)	SF4B-A□C(A-J05)				
SF4B-H12C(A-J05)	———	279 10.984	220 8.661	—	264.4 10.409	—	—	308.4 12.142
SF4B-H16C(A-J05)	SF4B-A8C(A-J05)	359 14.134	300 11.811	280 11.024	344.4 13.559	—	—	388.4 15.291
SF4B-H20C(A-J05)	———	439 17.283	380 14.961	—	424.4 16.709	—	—	468.4 18.441
SF4B-H24C(A-J05)	SF4B-A12C(A-J05)	519 20.433	460 18.110	440 17.323	504.4 19.858	—	—	548.4 21.591
SF4B-H28C(A-J05)	———	599 23.583	540 21.260	—	584.4 23.008	—	—	628.4 24.740
SF4B-H32C(A-J05)	SF4B-A16C(A-J05)	679 26.732	620 24.409	600 23.622	664.4 26.157	—	—	708.4 27.890
SF4B-H36C(A-J05)	———	759 29.882	700 27.559	—	744.4 29.307	—	—	788.4 31.039
SF4B-H40C(A-J05)	SF4B-A20C(A-J05)	839 33.031	780 30.709	760 29.921	824.4 32.457	399.5 15.728	—	868.4 34.189
SF4B-H48C(A-J05)	SF4B-A24C(A-J05)	999 39.331	940 37.008	920 36.220	984.4 38.756	479.5 18.878	—	1,028.4 40.488
SF4B-H56C(A-J05)	SF4B-A28C(A-J05)	1,159 45.630	1,100 43.307	1,080 42.520	1,144.4 45.055	559.5 22.028	—	1,188.4 46.787
SF4B-H64C(A-J05)	SF4B-A32C(A-J05)	1,319 51.929	1,260 49.606	1,240 48.819	1,304.4 51.354	419.5 16.516	858.5 33.799	1,348.4 53.087
SF4B-H72C(A-J05)	SF4B-A36C(A-J05)	1,479 58.228	1,420 55.906	1,400 55.118	1,464.4 57.654	472.5 18.602	965.5 38.012	1,508.4 59.386
SF4B-H80C(A-J05)	SF4B-A40C(A-J05)	1,639 64.528	1,580 62.205	1,560 61.417	1,624.4 63.953	525.5 20.689	1,072.5 42.224	1,668.4 65.685
SF4B-H88C(A-J05)	SF4B-A44C(A-J05)	1,799 70.827	1,740 68.504	1,720 67.716	1,784.4 70.252	578.5 22.776	1,179.5 46.437	1,828.4 71.984
SF4B-H96C(A-J05)	SF4B-A48C(A-J05)	1,959 77.126	1,900 74.803	1,880 74.016	1,944.4 76.551	631.5 24.862	1,286.5 50.650	1,988.4 78.283

Model No.	H	Q
SF4B-H□C(A-J05)	20 0.787	22.2 0.874
SF4B-A□C(A-J05)	40 1.575	42.2 1.661

DIMENSIONS (Unit: mm in)

The CAD data in the dimensions can be downloaded from our website.

SF4B-□CA-J05 SF4B-□C

Light curtain

Assembly dimensions

The figure depicts space-saving mounting using the side mounting bracket **MS-SF4BC-6**(optional) and the intermediate supporting bracket for side mounting bracket **MS-SF4BC-7**(optional).

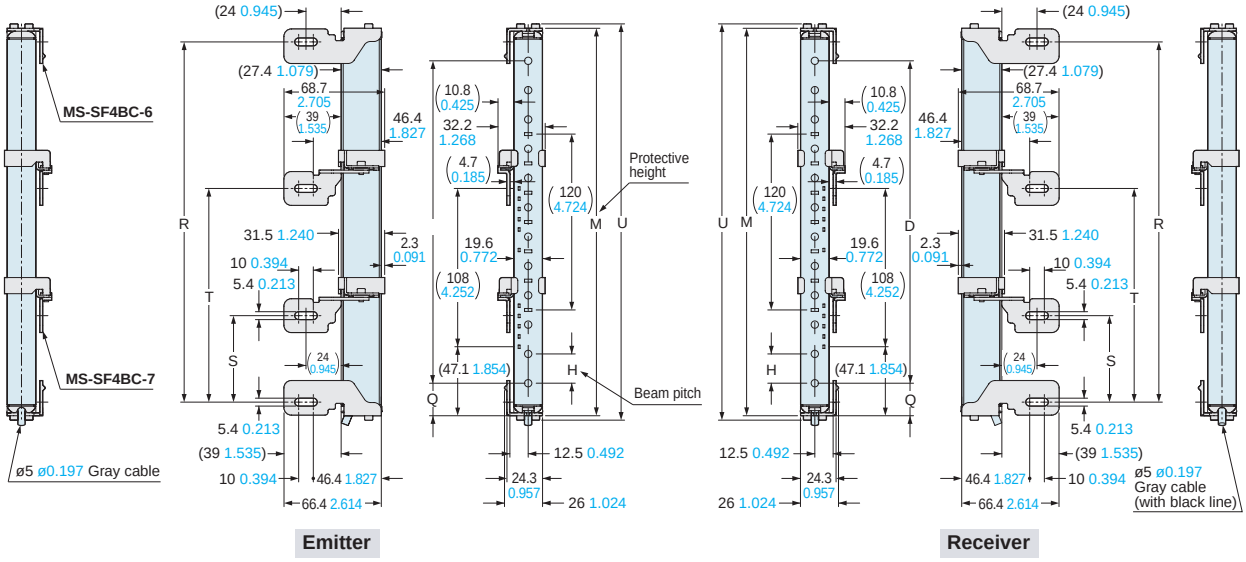

<Connector of the pigtailed type (with muting function) SF4B-□CA-J05>

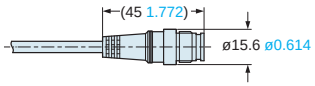

Model No.		D		M	R	S	T	U
		SF4B-H□C(A-J05)	SF4B-A□C(A-J05)					
SF4B-H12C(A-J05)	———	220 8.661	—	264.4 10.409	245.8 9.677	—	—	270.4 10.646
SF4B-H16C(A-J05)	SF4B-A8C(A-J05)	300 11.811	280 11.024	344.4 13.559	325.8 12.827	—	—	350.4 13.795
SF4B-H20C(A-J05)	———	380 14.961	—	424.4 16.709	405.8 17.748	—	—	430.4 16.945
SF4B-H24C(A-J05)	SF4B-A12C(A-J05)	460 18.110	440 17.323	504.4 19.858	485.8 19.126	—	—	510.4 20.094
SF4B-H28C(A-J05)	———	540 21.260	—	584.4 23.008	565.8 22.276	—	—	590.4 23.244
SF4B-H32C(A-J05)	SF4B-A16C(A-J05)	620 24.409	600 23.622	664.4 26.157	645.8 25.425	—	—	670.4 26.394
SF4B-H36C(A-J05)	———	700 27.559	—	744.4 29.307	725.8 28.575	—	—	750.4 29.543
SF4B-H40C(A-J05)	SF4B-A20C(A-J05)	780 30.709	760 29.921	824.4 32.457	805.8 31.724	382.9 15.075	—	830.4 32.693
SF4B-H48C(A-J05)	SF4B-A24C(A-J05)	940 37.008	920 36.220	984.4 38.756	965.8 38.024	462.9 18.224	—	990.4 38.992
SF4B-H56C(A-J05)	SF4B-A28C(A-J05)	1,100 43.307	1,080 42.520	1,144.4 45.055	1,125.8 44.323	542.9 21.374	—	1,150.4 45.291
SF4B-H64C(A-J05)	SF4B-A32C(A-J05)	1,260 49.606	1,240 48.819	1,304.4 51.354	1,285.8 50.622	402.9 15.862	841.9 33.146	1,310.4 51.590
SF4B-H72C(A-J05)	SF4B-A36C(A-J05)	1,420 55.906	1,400 55.118	1,464.4 57.654	1,445.8 56.921	455.9 17.949	948.9 37.358	1,470.4 57.890
SF4B-H80C(A-J05)	SF4B-A40C(A-J05)	1,580 62.205	1,560 61.417	1,624.4 63.953	1,605.8 63.220	508.9 20.035	1,055.9 41.571	1,630.4 64.189
SF4B-H88C(A-J05)	SF4B-A44C(A-J05)	1,740 68.504	1,720 67.716	1,784.4 70.252	1,765.8 69.520	561.9 22.122	1,162.9 45.783	1,790.4 70.488
SF4B-H96C(A-J05)	SF4B-A48C(A-J05)	1,900 74.803	1,880 74.016	1,944.4 76.551	1,925.8 75.819	614.9 24.209	1,269.9 49.996	1,950.4 76.787

Model No.	H	Q
SF4B-H□C(A-J05)	20 0.787	22.2 0.874
SF4B-A□C(A-J05)	40 1.575	42.2 1.661

DIMENSIONS (Unit: mm in)

The CAD data in the dimensions can be downloaded from our website.

MS-SF4BC-1

Standard mounting bracket (optional)

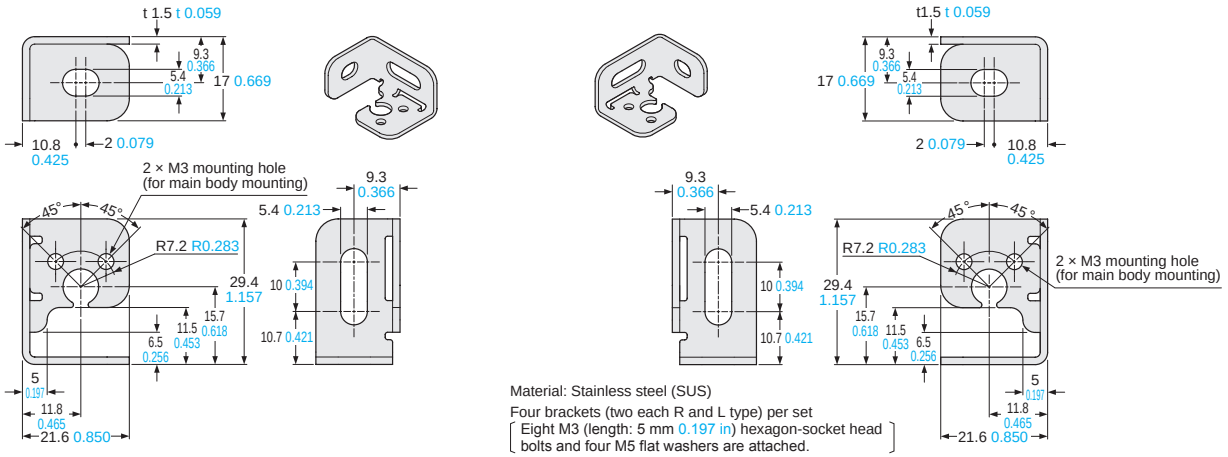

Material: Stainless steel (SUS)
Four brackets (two each R and L type) per set
Eight M3 (length: 5 mm 0.197 in) hexagon-socket head bolts and four M5 flat washers are attached.

MS-SF4BC-2

Rear utility mounting bracket (optional)

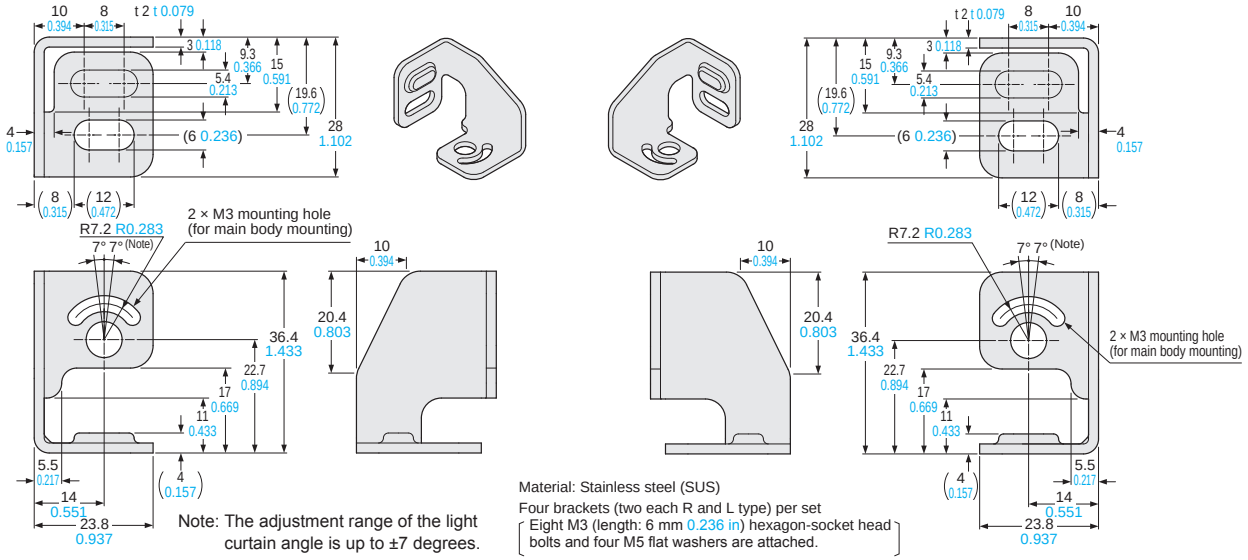

Note: The adjustment range of the light curtain angle is up to ±7 degrees.

Material: Stainless steel (SUS)
Four brackets (two each R and L type) per set
Eight M3 (length: 6 mm 0.236 in) hexagon-socket head bolts and four M5 flat washers are attached.

MS-SF4BC-3

Side utility mounting bracket (optional)

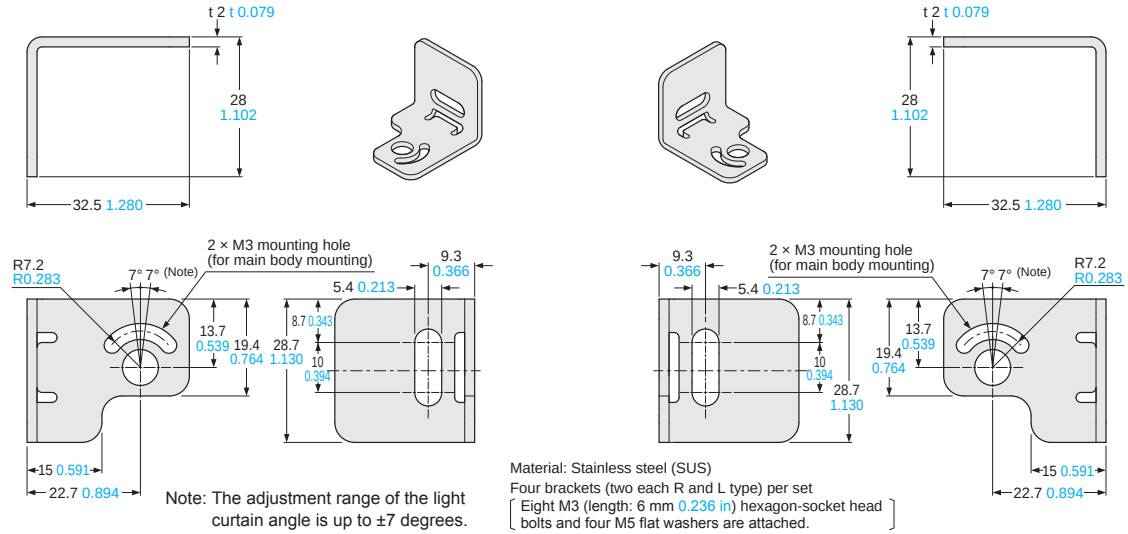

Note: The adjustment range of the light curtain angle is up to ±7 degrees.

Material: Stainless steel (SUS)
Four brackets (two each R and L type) per set
Eight M3 (length: 6 mm 0.236 in) hexagon-socket head bolts and four M5 flat washers are attached.

DIMENSIONS (Unit: mm in)

The CAD data in the dimensions can be downloaded from our website.

MS-SF4BC-4

Intermediate supporting bracket for utility mounting bracket (optional)

<For rear mounting>

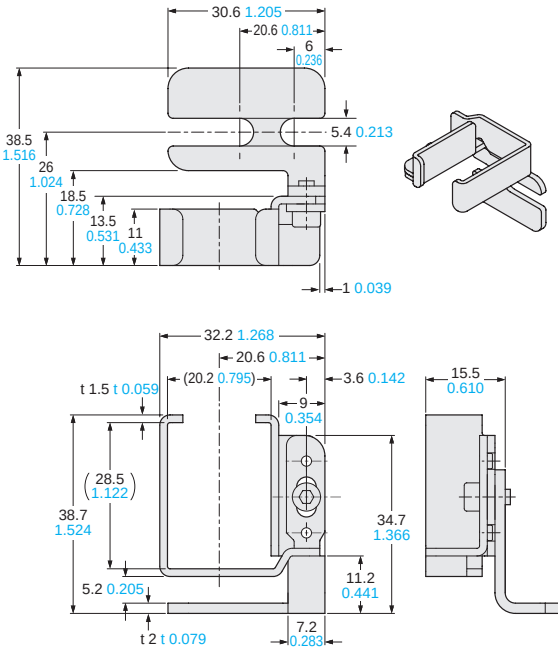

<For side mounting>

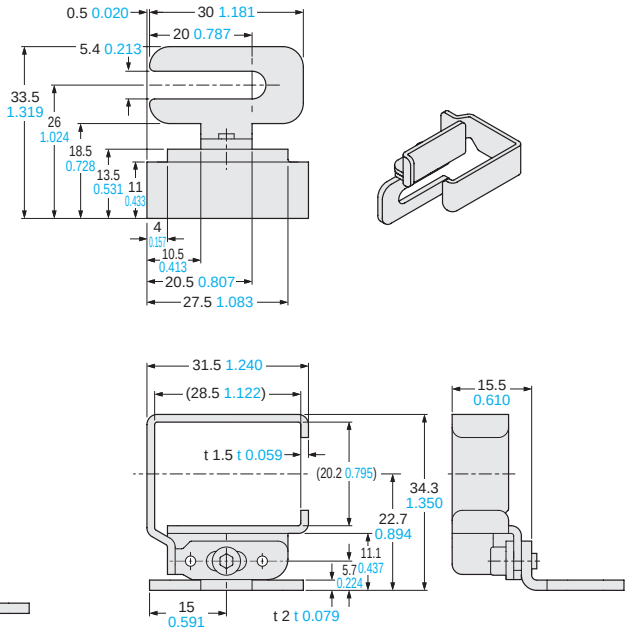

Material: Stainless steel (SUS)
Two pcs. M5 flat washers, two pcs. assembled M3 (length: 6 mm 0.236 in) hexagon-socket head bolts for rear mounting, two pcs. attachments for side mounting

Note: The numbers of sets required by **SF4B-H□C(A-J05)**(40 or more beam axes) and **SF4B-A□C(A-J05)** (20 or more beam axes) are as follows:
SF4B-H40C(A-J05), **SF4B-H48C(A-J05)**, **SF4B-H56C(A-J05)**, **SF4B-A20C(A-J05)**, **SF4B-A24C(A-J05)**, **SF4B-A28C(A-J05)**: 1 set
SF4B-H64C(A-J05), **SF4B-H72C(A-J05)**, **SF4B-H80C(A-J05)**, **SF4B-H88C(A-J05)**, **SF4B-H96C(A-J05)**, **SF4B-A32C(A-J05)**, **SF4B-A36C(A-J05)**, **SF4B-A40C(A-J05)**, **SF4B-A44C(A-J05)**, **SF4B-A48C(A-J05)**: 2 sets

MS-SF4BC-5

Intermediate supporting bracket for standard mounting bracket (optional)

<For rear mounting>

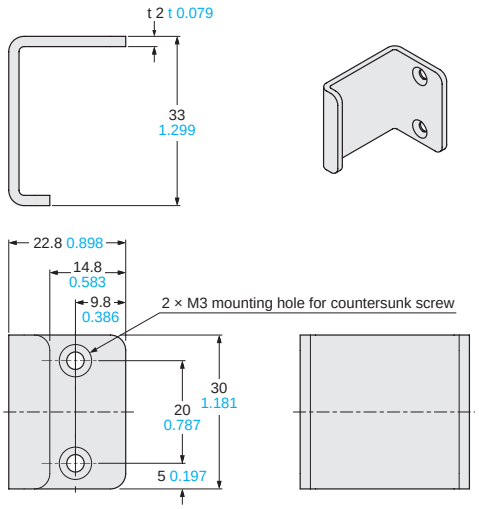

<For side mounting>

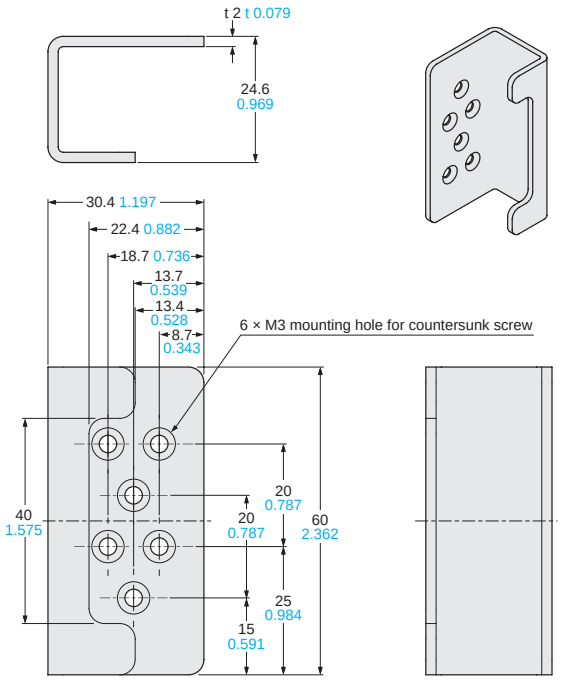

Material: Stainless steel (SUS)
Two pcs. for rear mounting, two pcs. for side mounting

Note: The numbers of sets required by **SF4B-H□C(A-J05)**(40 or more beam axes) and **SF4B-A□C(A-J05)** (20 or more beam axes) are as follows:
SF4B-H40C(A-J05), **SF4B-H48C(A-J05)**, **SF4B-H56C(A-J05)**, **SF4B-A20C(A-J05)**, **SF4B-A24C(A-J05)**, **SF4B-A28C(A-J05)**: 1 set
SF4B-H64C(A-J05), **SF4B-H72C(A-J05)**, **SF4B-H80C(A-J05)**, **SF4B-H88C(A-J05)**, **SF4B-H96C(A-J05)**, **SF4B-A32C(A-J05)**, **SF4B-A36C(A-J05)**, **SF4B-A40C(A-J05)**, **SF4B-A44C(A-J05)**, **SF4B-A48C(A-J05)**: 2 sets

DIMENSIONS (Unit: mm in)

The CAD data in the dimensions can be downloaded from our website.

MS-SF4BC-6

Side mounting bracket (optional)

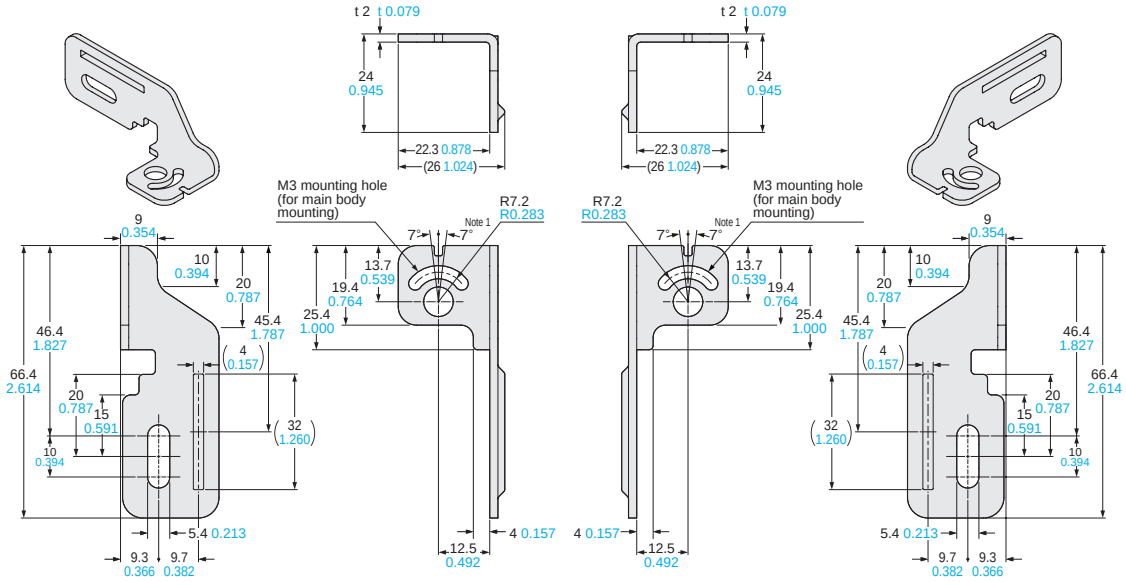

Material: Stainless steel (SUS)
Four brackets (two each L and R type) per set
[Eight M3 (length: 6 mm 0.236 in) hexagon-socket head bolts and four M5 flat washers are attached.]

Note: The adjustment range of the light curtain angle is up to ±7 degrees.

MS-SF4BC-7

Intermediate supporting bracket for side mounting bracket (optional)

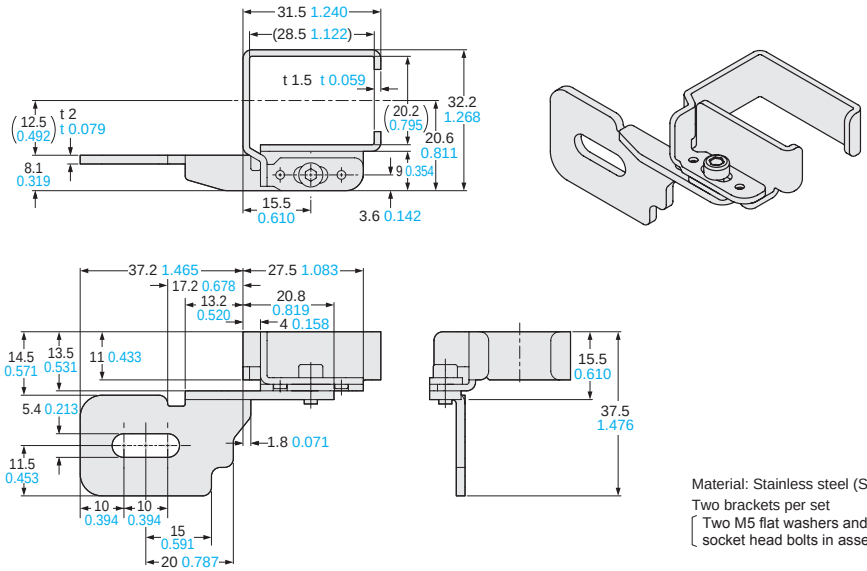

Material: Stainless steel (SUS)
Two brackets per set
[Two M5 flat washers and M3 (length: 6 mm 0.236 in) hexagon-socket head bolts in assembled state are attached.]

SFB-CC□-MU

Mating cable with connector on one end (optional)

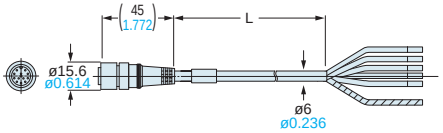

• Length: L

Model No.	Length: L
SFB-CC3-MU	3,000 118.110
SFB-CC7-MU	7,000 275.591
SFB-CC10-MU	10,000 393.701

SFB-CCJ□-MU

Mating cable with connectors on both ends (optional)

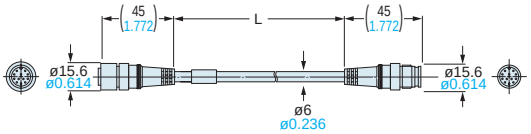

• Length: L

Model No.	Length: L
SFB-CCJ3D-MU	3,000 118.110
SFB-CCJ3E-MU	
SFB-CCJ10D-MU	10,000 393.701
SFB-CCJ10E-MU	

DIMENSIONS (Unit: mm in)

The CAD data in the dimensions can be downloaded from our website.

SF-C13 — Control unit (optional)

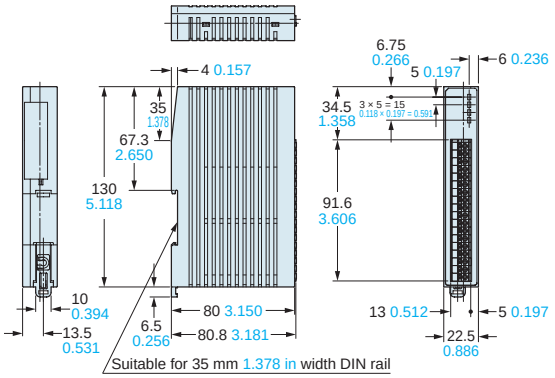

SFB-HC — Handy-controller (optional)

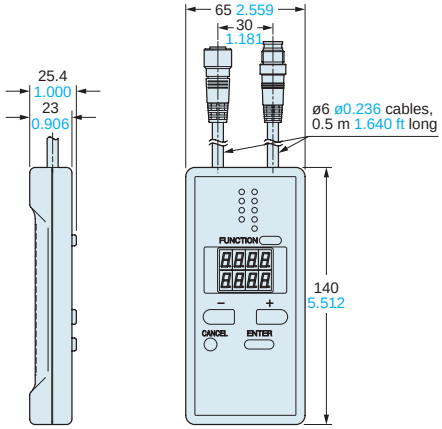

SF-IND-2 — Large display unit for light curtain (optional)

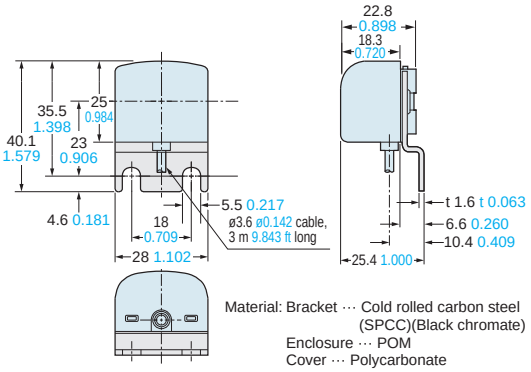

Material: Bracket ··· Cold rolled carbon steel (SPCC)(Black chromate)
Enclosure ··· POM
Cover ··· Polycarbonate

MS-SF4BCH-□ — Metal protection case (optional)

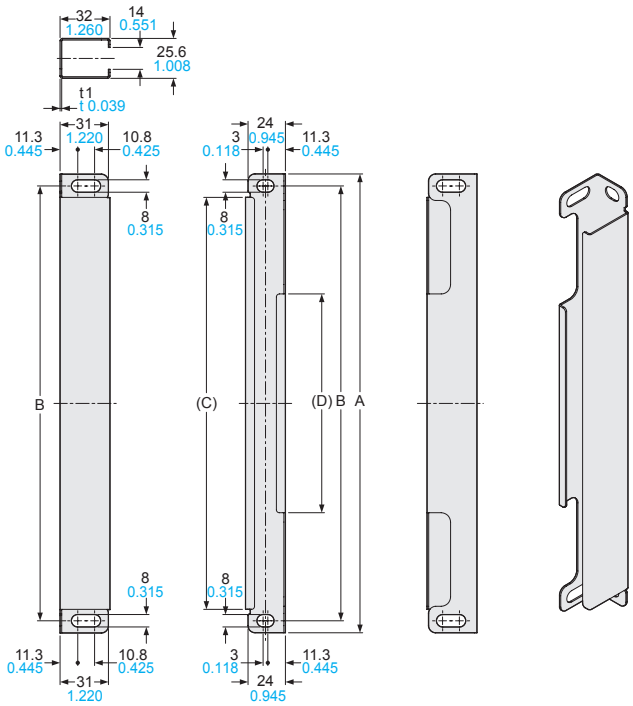

Model No.	A	B	C	D
MS-SF4BCH-12	294.4 11.591	279 10.984	264.4 10.409	140.4 5.528
MS-SF4BCH-16	374.4 14.740	359 14.134	344.4 13.559	220.4 8.677
MS-SF4BCH-20	454.4 17.890	439 17.283	424.4 16.709	300.4 11.827
MS-SF4BCH-24	534.4 21.039	519 20.433	504.4 19.858	380.4 14.976
MS-SF4BCH-28	614.4 24.189	599 23.583	584.4 23.008	460.4 18.126
MS-SF4BCH-32	694.4 27.339	679 26.732	664.4 26.157	540.4 21.276
MS-SF4BCH-36	774.4 30.488	759 29.882	744.4 29.307	620.4 24.425
MS-SF4BCH-40	854.4 33.638	839 33.031	824.4 32.457	700.4 27.575
MS-SF4BCH-48	1,014.4 39.937	999 39.331	984.4 38.756	860.4 33.874
MS-SF4BCH-56	1,174.4 46.236	1,159 45.630	1,144.4 45.055	1,020.4 40.173
MS-SF4BCH-64	1,334.4 52.535	1,319 51.929	1,304.4 51.354	1,180.4 46.472
MS-SF4BCH-72	1,494.4 58.835	1,479 58.228	1,464.4 57.654	1,340.4 52.772
MS-SF4BCH-80	1,654.4 65.134	1,639 64.528	1,624.4 63.953	1,500.4 59.071
MS-SF4BCH-88	1,814.4 71.433	1,799 70.827	1,784.4 70.252	1,660.4 65.370
MS-SF4BCH-96	1,974.4 77.732	1,959 77.126	1,944.4 76.551	1,820.4 71.669

Material: Stainless steel (SUS304)