Panasonic INSTRUCTION MANUAL

Digital Fiber Sensor Amplifier
FX-301B(P) FX-301G(P) FX-301H(P)

ME-FX301BGH No.0017-03V

Thank you very much for using Panasonic products. Please read this Instruction Manual carefully and thoroughly for the correct and optimum use of this product. Kindly keep this manual in a convenient place for quick reference.

⚠ WARNING

- Never use this product as a sensing device for personnel protection.
- In case of using sensing devices for personnel protection, use products which meet laws and standards, such as OSHA, ANSI or IEC etc., for personnel protection applicable in each region or country.

For further details on the fiber sensor amplifier, please refer to '**Panasonic Electric Works SUNX website** (**http://panasonic-electric-works.net/sunx**)' or contact our office.

1 SPECIFICATIONS

Item \ Type		Blue LED type	Green LED type	Infrared LED type
Model No.	NPN output	**FX-301B**	**FX-301G**	**FX-301H**
	PNP output	**FX-301BP**	**FX-301GP**	**FX-301HP**
Supply voltage		12 to 24V DC±10% Ripple P-P 10% or less		
Power consumption		Normal operation: 720mW or less (current consumption 30mA or less at 24V supply voltage) ECO mode: 430mW or less (current consumption 18mA or less at 24V supply voltage)		Normal operation: 960mW or less (current consumption 40mA or less at 24V supply voltage) ECO mode: 600mW or less (current consumption 25mA or less at 24V supply voltage)
Output		**<NPN output type>** NPN open-collector transistor ・Maximum sink current: 100mA (Note 1) ・Applied voltage: 30V DC or less (between output and 0V) ・Residual voltage: 1.5V or less [at 100mA (Note 1) sink current]	**<PNP output type>** PNP open-collector transistor ・Maximum source current: 100mA (Note 1) ・Applied voltage: 30V DC or less (between output and +V) ・Residual voltage: 1.5V or less [at 100mA (Note 1) source current]	
	Output operation	Light-ON or Dark-ON, selectable with jog switch		
	Short-circuit protection	Incorporated		
Response time		150 μs or less, 250 μs or less, 2.0ms or less selectable with jog switch		
Display		4 digit red LED display		
Sensitivity setting		2-level teaching / Limit teaching / Full-auto teaching / Manual adjustment		
Fine sensitivity adjustment function		Incorporated		
Timer function		Incorporated with variable ON-delay / OFF-delay / ONE-SHOT timer, switchable either effective or ineffective		
Interference prevention function		Incorporated (up to four fibers can be mounted adjacently) (Note 2)		
Ambient temperature		-10 to +55℃ (If 4 to 7 units are connected in cascade: -10 to +50℃, if 8 to 16 units are connected in cascade: -10 to +45℃) (No dew condensation or icing allowed), Storage: -20 to +70℃		
Ambient humidity		35 to 85% RH, Storage: 35 to 85% RH		
Emitting element		Blue LED (modulated)	Green LED (modulated)	Infrared LED (modulated)
Material		Enclosure: Heat-resistant ABS, Transparent cover: Polycarbonate Press switches: Acrylic		
Weight		20g approx.		

Notes: 1) 50mA, when five, or more, amplifiers are connected in cascade.
2) When the power supply is switched on, the light emission timing is automatically set for interference prevention.
3) The cable for amplifier connection is not supplied as an accessory. Be sure to use the optional quick-connection cables given below.
Main cable (3-core): **CN-73-C1** (cable length 1m), **CN-73-C2** (cable length 2m) **CN-73-C5** (cable length 5m)
Sub cable (1-core): **CN-71-C1** (cable length 1m), **CN-71-C2** (cable length 2m) **CN-71-C5** (cable length 5m)

2 MOUNTING

How to mount the amplifier

① Fit the rear part of the mounting section of the amplifier on a 35mm width DIN rail.
② Press down the rear part of the mounting section of the unit on the 35mm width DIN rail and fit the front part of the mounting section to the DIN rail.

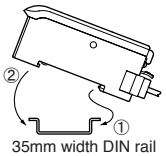

How to remove the amplifier

① Push the amplifier forward.
② Lift up the front part of the amplifier to remove it.

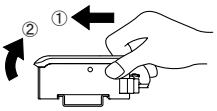

Note: Take care that if the front part is lifted without pushing the amplifier forward, the hook on the rear portion of the mounting section is likely to break.

How to connect the fiber cables

Be sure to fit the attachment to the fibers first before inserting the fibers to the amplifier. For details, refer to the instruction manual enclosed with the fibers.

① Snap the fiber lock lever down.
② Insert the fiber cables slowly into the inlets until they stop. (Note 1)
③ Return the fiber lock lever to the original position, till it stops.

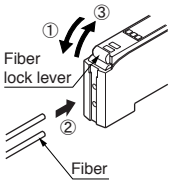

Notes: 1) In case the fiber cables are not inserted to a position where they stop, the sensing range reduces. In case of a flexible fiber, take care that it may bend inside the amplifier, during insertion.
2) With the coaxial reflective type fiber, such as, **FD-G4** or **FD-FM2**, insert the single-core fiber cable into the beam-emitting inlet and the multi-core fiber cable into the beam-receiving inlet. If they are inserted in reverse, the sensing accuracy will deteriorate.

3 CONNECTION

Make sure that the power supply is off while connecting or disconnecting the quick-connection cable.

Connection method

① Holding the connector of the quick-connection cable, align its projection with the groove at the top portion of the amplifier connector.
② Insert the connector till a click is felt.

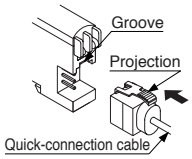

Disconnection method

① Pressing the projection at the top of the quick-connection cable, pull out the connector.

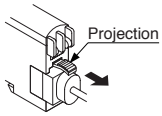

Note: Take care that if the connector is pulled out without pressing the projection, the projection may break. Do not use a quick-connection cable whose projection has broken. Further, do not pull by holding the cable, as this can cause a cable-break.

4 CAUTIONS

- This product has been developed / produced for industrial use only.
- Make sure that the power supply is off while wiring.
- Verify that the supply voltage variation is within the rating.
- Take care that if a voltage exceeding the rated range is applied, or if an AC power supply is directly connected, the sensor may get burnt or damaged.
- In case noise generating equipment (switching regulator, inverter motor, etc.) is used in the vicinity of this product, connect the frame ground (F.G.) terminal of the equipment to an actual ground.
- If power is supplied from a commercial switching regulator, ensure that the frame ground (F.G.) terminal of the power supply is connected to an actual ground.
- Do not use during the initial transient time (0.5 sec.) after the power supply is switched on.
- Take care that short-circuit of the load or wrong wiring may burn or damage the sensor.
- Do not run the wires together with high-voltage lines or power lines or put them in the same raceway. This can cause malfunction due to induction.
- Be sure to use the optional quick-connection cable.
- Extension up to total 100m (if 5 to 8 units are connected in cascade: 50m, if 9 to 16 units are connected in cascade: 20m) is possible with 0.3mm^2, or more, cable. However, in order to reduce noise, make the wiring as short as possible.
- Take care that cable extension increases the residual voltage.
- This sensor is suitable for indoor use only.
- Avoid dust, dirt, and steam.
- Take care that the product does not come in contact with water, oil, grease, organic solvents, such as, thinner, etc., strong acid or alkaline.
- This sensor cannot be used in an environment containing inflammable or explosive gases.
- Never disassemble or modify the sensor.

5 CASCADING

- Make sure that the power supply is off while adding or removing the amplifiers.
- Make sure to check the allowable ambient temperature, as it depends on the number of amplifiers connected in cascade.
- In case two, or more, amplifiers are connected in cascade, make sure to mount them on a DIN rail.
- When the amplifiers move on the DIN rail depending on the attaching condition or the amplifiers are mounted close to each other in cascade, fit them between the optional end plates (**MS-DIN-E**) mounted at the two ends.
- Up to maximum 15 amplifiers can be added (total 16 amplifiers connected in cascade.)
- When connecting more than two amplifiers in cascade, use the sub cable (**CN-71-C**□) as the quick-connection cable for the second amplifier onwards.
- When connecting amplifiers not close to each other in parallel, be sure to mount the optional end plate (**MS-DIN-E**) at both sides of each amplifier or affix the communication window seal of the accessory amplifier protection seal (**FX-MB1**) to the communication windows.
- The settings other than the interference prevention function cannot be transmitted between this product and other digital fiber amplifiers. Therefore, in case both models of amplifiers are mounted in cascade, be sure to mount identical models together. However, the interference prevention function is not incorporated into the **FX-301**(**P**)**-HS**. Take care when the sensors are mounted in cascade.
- Since the communication function of this product and that of the **FX-301**(**P**)**-F** is different, if these models are mounted in cascade, affix the accessory amplifier protection seal (**FX-MB1**) to the communication windows of the amplifiers.

For mounting and removing the amplifier, refer to '**2 MOUNTING**'.

Cascading method

① Mount the amplifiers, one by one, on the 35mm width DIN rail.
② Slide the amplifiers next to each other, and connect the quick-connection cables.
③ Mount the optional end plates (**MS-DIN-E**) at both the ends to hold the amplifiers between their flat sides.
④ Tighten the screws to fix the end plates.

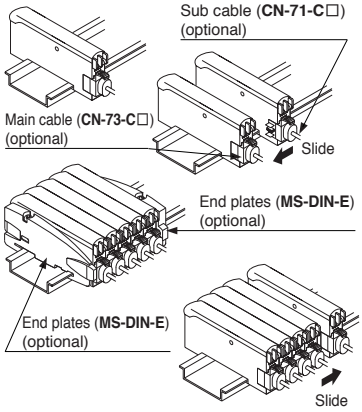

Dismantling

① Loosen the screws of the end plates.
② Remove the end plates.
③ Slide the amplifiers and remove them one by one.

6 I/O CIRCUIT DIAGRAMS

● **NPN output type**

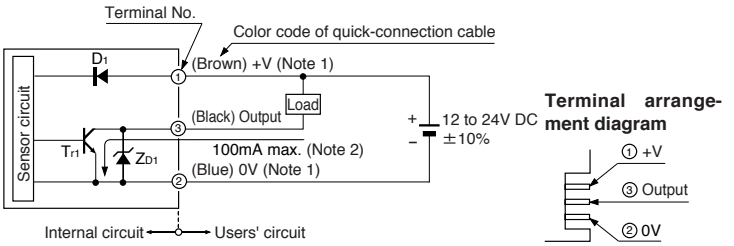

● **PNP output type**

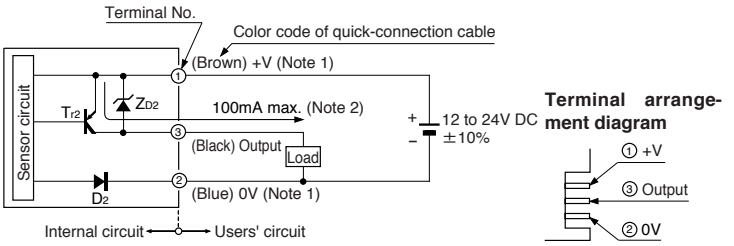

Notes: 1) The quick-connection sub cable does not have +V (brown) and 0V (blue).
The power is supplied from the connector of the main cable.
2) 50mA max., if five, or more, the amplifiers are connected in cascade.

Symbols...D_1, D_2: Reverse supply polarity protection diode
Z_{D1}, Z_{D2}: Surge absorption zener diode
T_{r1}: NPN output transistor
T_{r2}: PNP output transistor

7 PART DESCRIPTION

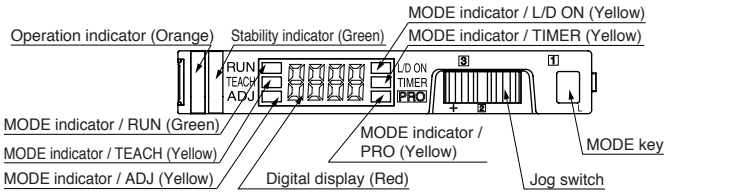

8 OPERATION PROCEDURE

● When the power supply is switched on, communication self-check is carried out and normal condition is displayed [MODE indicator / RUN (green)] lights up and the digital display shows the incident light intensity.

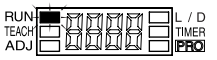

MODE key	Jog switch		
Press	Press	Turn	
		'+' side	'-' side

*1: When Jog switch is pressed, the setting is confirmed.
*2: When MODE key is pressed for 2 sec., or more, the sensor returns to the 'RUN' mode.
*3: Cancellation is possible by pressing MODE key during setting.
*4: When Jog switch is turned in the 'RUN' mode, the current threshold value is displayed. And then, the current incident light intensity display appears again automatically.

● **NAVI mode**

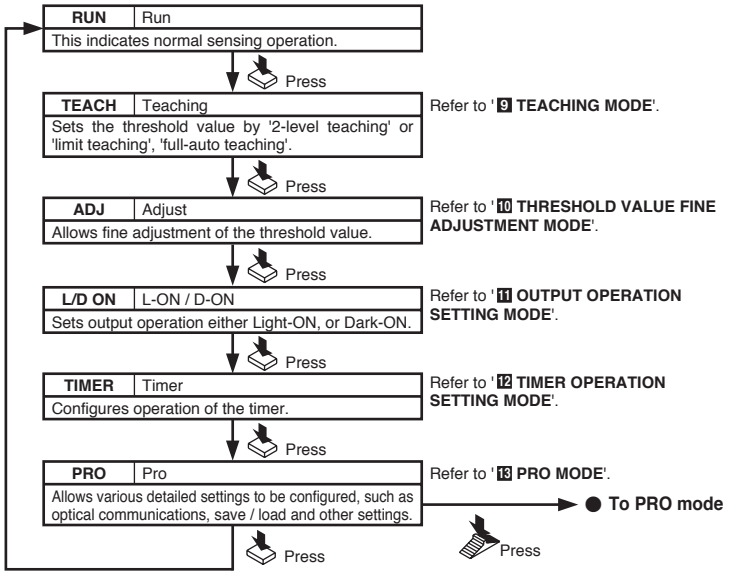

● **PRO mode**

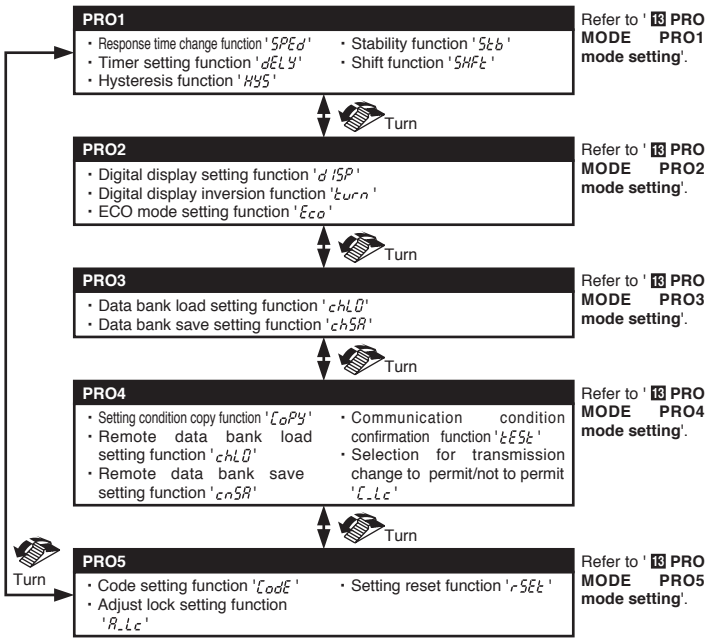

The 0-ADJ setting function in this product was removed from production starting May, 2005.

9 TEACHING MODE

In case of 2-level teaching

● This is the method of setting the threshold value by teaching two levels, corresponding to the object present and object absent conditions. Normally, setting is done by this method.

Step	Display	Description
①	1234	・Set the fiber within the sensing range. ・Press MODE key to light up MODE indicator / TEACH (yellow). Press
②	567	・Press Jog switch in the object present condition. ・If the teaching is accepted, the read incident light intensity blinks in the digital display. Press
③	1234	・The MODE indicator / TEACH (yellow) blinks. ・Press Jog switch in the object absent condition. Press
④	Good HArd	・If the teaching is accepted, the read incident light intensity blinks in the digital display and the threshold value is set at the mid-value between the incident light intensities in the object present and the object absent conditions. After this, the judgment on the stability of sensing is displayed. In case stable sensing is possible: 'Good' is displayed. In case stable sensing is not possible: 'HArd' is displayed.
⑤	900	・The threshold value is displayed.
⑥	----	・' ---- ' blinks in the digital display.
⑦	1234	・The incident light intensity appears in the digital display and the setting is complete.

In case of limit teaching

● This is the method of setting the threshold value by teaching only the object absent condition (stable incident light condition). This is used for detection in the presence of a background body or for detection of small objects.

Step	Display	Description
①	1234	・Set the fiber within the sensing range. ・Press MODE key to light up MODE indicator / TEACH (yellow). Press
②	1234	・Press Jog switch in the object absent condition. ・If the teaching is accepted, the read incident light intensity blinks in the display. Press
③	1234	・The MODE indicator / TEACH (yellow) blinks. ・Turn Jog switch to the '+' side or the '-' side. Turn
④	,	・If Jog switch is turned to the '+' side, ' , ' scrolls (twice) the display from right to left, and the threshold level is shifted to a value approx. 15% higher (lower sensitivity) than that set at ②. (Note) This is used in case of reflective type fibers. Turn to '+' side ・If Jog switch is turned to the '-' side, ' , ' scrolls (twice) the display from left to right, and the threshold level is shifted to a value approx. 15% lower (higher sensitivity) than that set at ②. (Note) This is used in case of thru-beam type fibers. Turn to '-' side High / Sensitivity level / Low; 100%; 15%; 15%; 0; OFF ON; ON OFF; Sensitivity level; Sensitivity level with object absent; Sensitivity level; Turn to '+' side; Turn to '-' side
⑤	Good HArd	・After this, the judgment on whether the set shift amount is possible or not will be displayed. When the shift is possible: 'Good' is displayed. When the is not possible: 'HArd' is displayed.
⑥	1420	・The threshold value is displayed.
⑦	----	・' ---- ' blinks in the digital display.
⑧	1234	・The incident light intensity appears in the digital display and the setting is complete.

Note: The approx. 15% amount of shift is the initial value. The amount of shift can be changed in the PRO mode from approx. 0 to 80% (5% step). Refer to '13 PRO MODE / PRO1 mode setting' for the setting method.

In case of full-auto teaching

- Full-auto teaching is used when it is desired to set the threshold value without stopping the assembly line, with the object in the moving condition.

Step	Display	Description
①	1234	・Set the fiber within the sensing range. ・Press MODE key to light up MODE indicator / TEACH (yellow). Press
②	567	・Press Jog switch continuously for 0.5 sec. or more with the object moving on the assembly line. (The incident light intensity is displayed during sampling.) Press
③	Auto	・' Auto ' is displayed on the digital display. Release the jog switch when the object has passed.
④	Good HArd	・If the teaching is accepted, the read incident light intensity blinks in the digital display and the threshold value is set at the mid-value between the incident light intensities in the object present and the object absent conditions. After this, the judgment on the stability of sensing is displayed. In case stable sensing is possible: ' Good ' is displayed. In case stable sensing is not possible: ' HArd ' is displayed.
⑤	900	・The threshold value is displayed.
⑥	----	・' ---- ' blinks in the digital display.
⑦	1234	・The incident light intensity appears in the digital display and the setting is complete.

10 THRESHOLD VALUE FINE ADJUSTMENT MODE

- Fine adjustment of the threshold value can be done when MODE indicator / ADJ (yellow) lights up.
- When Jog switch is turned to the '+' side, the threshold value increases (sensitivity decreases).
  When Jog switch is pressed, the threshold value is confirmed.

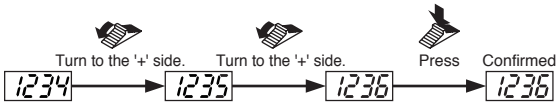

- When Jog switch is turned to the '-' side, the threshold value decreases (sensitivity increases).
  When Jog switch is pressed, the threshold value is confirmed.

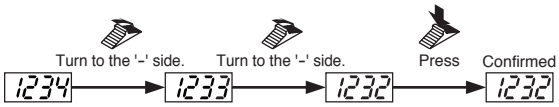

Note: Set the threshold value at least a bit higher than the minimum threshold value. (The minimum threshold value is where the value cannot be lowered any further even if the jog switch is turned to '-' side.)

11 OUTPUT OPERATION SETTING MODE

- The output operation setting can be done when MODE indicator / L/D ON (yellow) lights up.
- The output operation is changed when Jog switch is turned to the '+' side or the '-' side.
  When Jog switch is pressed, the threshold value is confirmed.

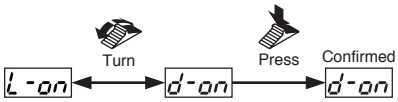

12 TIMER OPERATION SETTING MODE

- The setting for whether the timer is used or not can be done when MODE indicator / TIMER (yellow) lights up.
- 10ms OFF-delay (initial value) timer is automatically set when the timer is set to be used.
- Refer to '**13 PRO MODE / PRO1 mode setting**' for the setting method of the OFF-delay timer, ON-delay timer and ONE-SHOT timer intervals.

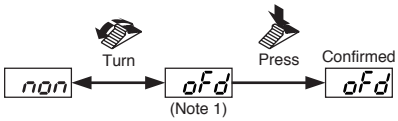

Notes: 1) The timer interval set in the PRO mode is displayed.
2) The factory setting is without timer ' non '.

13 PRO MODE

For details of the settings and the setting procedure of the PRO mode, refer to '**Panasonic Electric Works SUNX website** (**http://panasonic-electric-works.net/sunx**)' or contact our office.

- PRO settings can be done when MODE indicator / PRO (yellow) lights up.

PRO1 mode setting

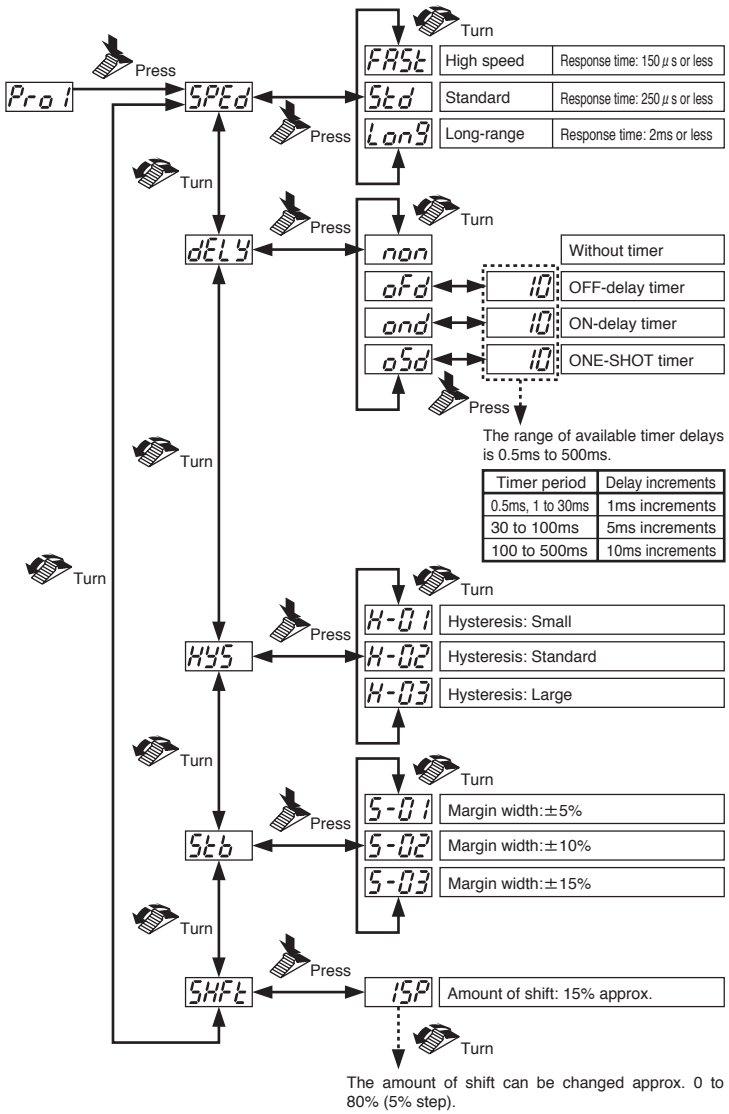

PRO2 mode setting

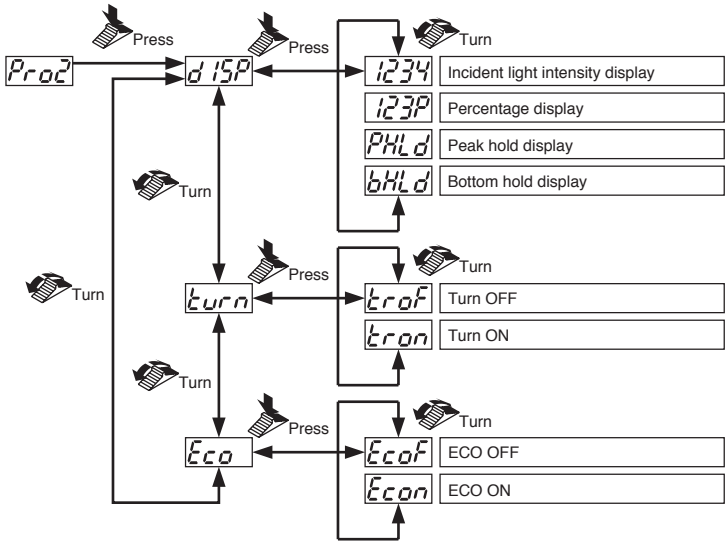

PRO3 mode setting

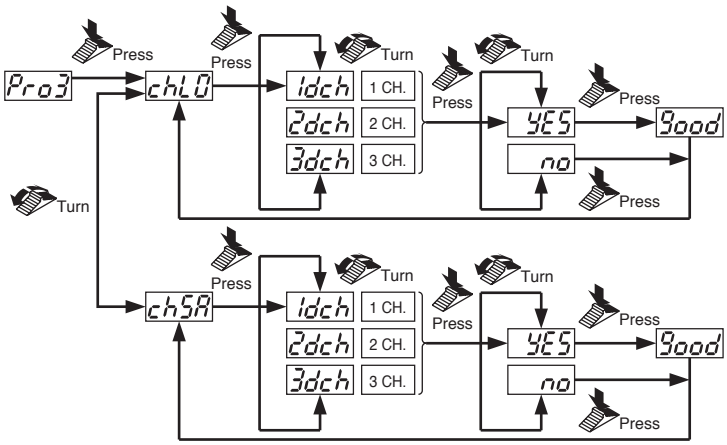

PRO4 mode setting

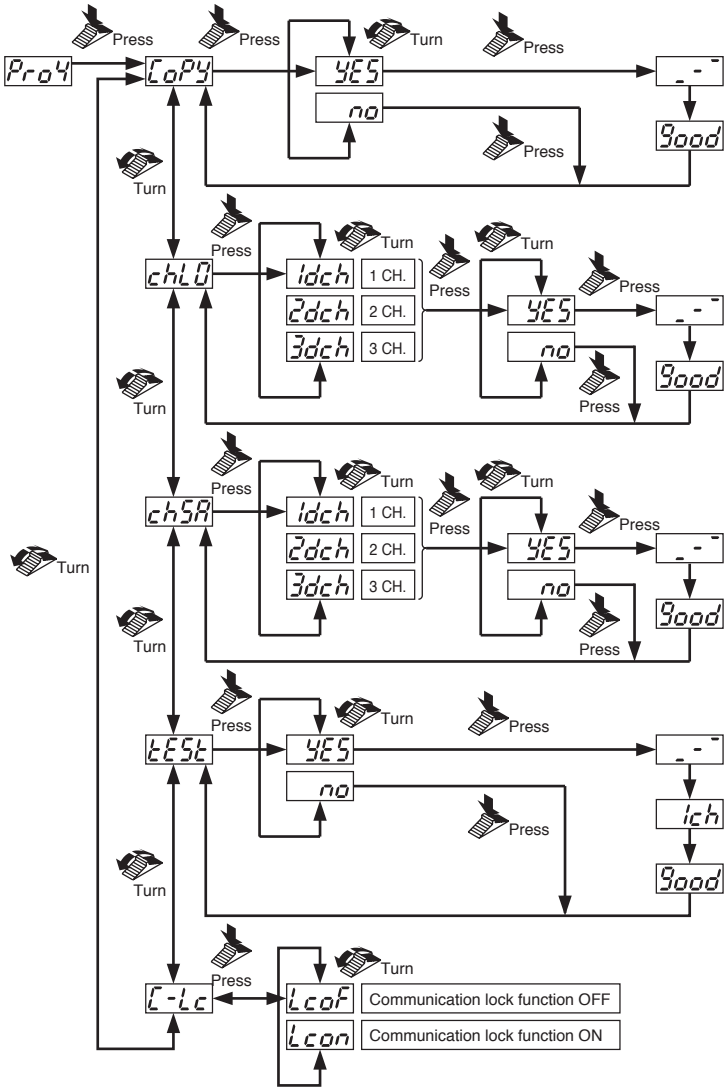

PRO5 mode setting

The 0-ADJ setting function in this product was removed from production starting May, 2005.

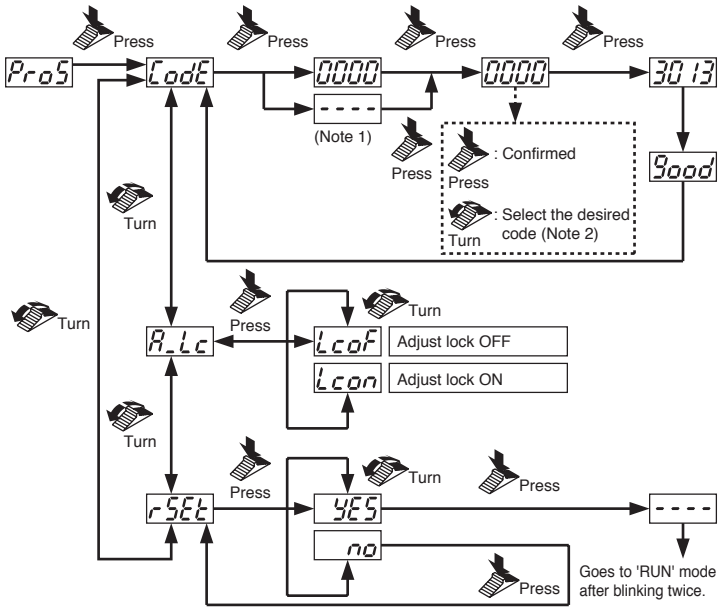

Notes: 1) When any code other than the codes given in the Code setting table below is used, ' - ' is displayed. The factory setting is '0004'.
2) When the code setting function is used, refer to the 'Code setting table' given below.

Code setting table

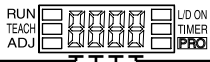

1st figure			2nd figure			3rd figure			4th figure	
Direct code	Response time	Hysteresis	Direct code	L-ON/ D-ON	Display	Direct code	Adjust lock	Timer operation	Direct code	Timer
0	STD	H-02 (standard)	0	L-ON	digit	0	ON	NON	0	OFF
1	STD	H-03 (large)	1	L-ON	Percent	1	ON	OFF-delay	1	1ms
2	STD	H-01 (small)	2	L-ON	Peak hold	2	ON	ON-delay	2	3ms
3	LONG	H-02 (standard)	3	L-ON	Bottom hold	3	ON	ONE-SHOT	3	5ms
4	LONG	H-03 (large)	4	D-ON	digit	4	OFF	NON	4	10ms
5	LONG	H-01 (small)	5	D-ON	Percent	5	OFF	OFF-delay	5	30ms
6	FAST	H-02 (standard)	6	D-ON	Peak hold	6	OFF	ON-delay	6	50ms
7	FAST	H-03 (large)	7	D-ON	Bottom hold	7	OFF	ONE-SHOT	7	100ms
8	FAST	H-01 (small)	–	–	–	–	–	–	8	300ms
–	–	–	–	–	–	–	–	–	9	500ms

3) In order to change PRO mode setting to 'RUN' mode, press MODE key for 2 sec. or more.

14 KEY LOCK FUNCTION

- If the jog switch and MODE key are pressed for more than 2 sec. at the same time in 'RUN' mode condition, the key operations are locked, and only the threshold value confirmation function or the adjust function (valid only when the adjust lock function is canceled) is valid. To cancel the lock function, press both the keys for more than 2 sec. once again.

15 ERROR INDICATION

- In case of errors, attempt the following measures.

Display	Error description	Measures
Er-1	The load has short-circuited and excess current is flowing.	Turn off the power, then check the load.
Er-5	Communication error has occurred at the time of connection in cascade.	Check that the mounted amplifiers are in close contact with each other.

16 INTENDED PRODUCTS FOR CE MARKING

- The models listed under '**1 SPECIFICATIONS**' come with CE Marking.
  As for all other models, please contact our office.

Panasonic Electric Works SUNX Co., Ltd.

http://panasonic-electric-works.net/sunx

Overseas Sales Division (Head Office)
2431-1 Ushiyama-cho, Kasugai-shi, Aichi, 486-0901, Japan
Phone: +81-568-33-7861 FAX: +81-568-33-8591

Europe Headquarter: Panasonic Electric Works Europe AG
Rudolf-Diesel-Ring 2, D-83607 Holzkirchen, Germany
Phone: +49-8024-648-0

US Headquarter: Panasonic Electric Works Corporation of America
629 Central Avenue New Providence, New Jersey 07974 USA
Phone: +1-908-464-3550

PRINTED IN JAPAN

© Panasonic Electric Works SUNX Co., Ltd. 2010