OPTEX FA

Photoelectric Sensor

TOF-3V SERIES

- TOF-3V300□□1
- TOF-3V300□□
- TOF-3V2000□□

INSTRUCTION MANUAL

- Confirm if the item meets your needs.
- Before the use, you should first thoroughly read this manual and operate correctly as mentioned.
- You should keep this manual at hand for proper use.

Carefully read and understand the safety precautions before operation.
The important information is provided to protect your health and property.
Do not apply any other installing or operating procedure other than that described in this manual.

Meanings of Safety Symbol

⚠ WARNING	Indicates a possible hazard that may result in death,serious injury. WARNINGS or serious property damage if the product is used without observing the stated instructions.

⚠ WARNING Mandatory Requirements

- The light source of this product applies the visible light semiconductor laser. Do not allow the laser beam to enter an eye,either directly or reflected from reflective object. If the laser beam enters an eye,it may cause blindness.
- Do not disassemble or modify the product since it is not designed to automatically stop the laser emission when open. Disassembling or modifying at customer's end it may cause personal injury,fire or electric shock.
- This product is not an explosionproof construction. Do not use the product under flammable , explosive gas or liquid environment.
- Use of controls or adjustments or performance of procedures other than those specified herein may result in hazardous radiation exposure.

⚠ CAUTION Safety Precautions

- It is dangerous to wire or attach/remove the connector with the power on. Make sure to turn off the power before operation.
- Installing in the following places may result in malfunction:
  1. A dusty or steamy place
  2. A place generating corrosive gas
  3. A place directly receiving scattering water or oil.
  4. A place suffered from heavy vibration or impact.
- The product is not designed for outdoor use.
- Do not use the sensor in transient state after power on (approx.400ms).
- Do not wire with the high voltage cable or the powerline. Failure to do this will cause malfunction by induction or damage.
- The sensor performance or digital display values may depend on the individual units or the condition of detected product.
- Do not use the product in water.
- Operate within the rated range.
- Wipe off dirt on the emitting/receiving parts to maintain correct detection. Also, avoid direct impact on the product.

This product cannot be used as a safety device to protect human body.

SPECIFICATIONS

Type		Diffused Reflection type		Retro Reflection type	
Connection		2m Cable	M12 Connector	2m Cable	M12 Connector
Item Output	1 output	TOF-3V300(P/N)1	TOF-3V300C(P/N)1	–	–
	2 output	TOF-3V300(P/N)	TOF-3V300C(P/N)	TOF-3V2000(P/N)	TOF-3V2000C(P/N)
Supply Voltage		DC10～30V Including ripple (P-P) 10%			
Current Consumption		70mA max.			
Ditecting Distance		3,000mm (White 90%)		20m (Reflector V-61)	
Light Source		Red Laser Diode (650nm Class1)			
Spot Diameter		～φ12mm / 3m		～φ50mm / 20m	
Beam Divergence		±0.5° (±9mrad) max.			
Hysteresis		15% max.:300～1500mm, 6% max.:1500～3000mm		10% max.:1～4m, 3% max.:4～20m	
Resolution		2mm		10mm	
Response Time		0.5ms		2ms	
Operating Mode		Light ON/Dark ON selectable by Volume			
Indicator		Output indicator (orange LED) / Stable indicator (green LED)			
Sensitivity Adjustment		4 turns volume		12 turns volume	
Control Output		NPN/PNP open collector DC30V, 100mA max. (Residual voltage 1.8V max.)			
External Input		Laser OFF			
Number of cross talk prevention		2 units max.			
Sircuit Protection		Reverse polarity, Over current			
Ambient Temp./Humidity		-10～50℃ / 35～85%RH			
Storage Temp./Humidity		-40～70℃ / 35～95%RH			
Environmental Illuminance	Sun Light	4,000lx max. (at 1m)			
	Incandescent Ligh	3,000lx max. (at 1m)			
Vibration Resistance		10～55Hz amplitude1.5mm X, Y, Z each 2h			
Shock Resistance		500m/s² X, Y, Z each 3times			
Protection Category		IEC144 IP67			

INPUT AND OUTPUT CIRCUIT DIAGRAMS

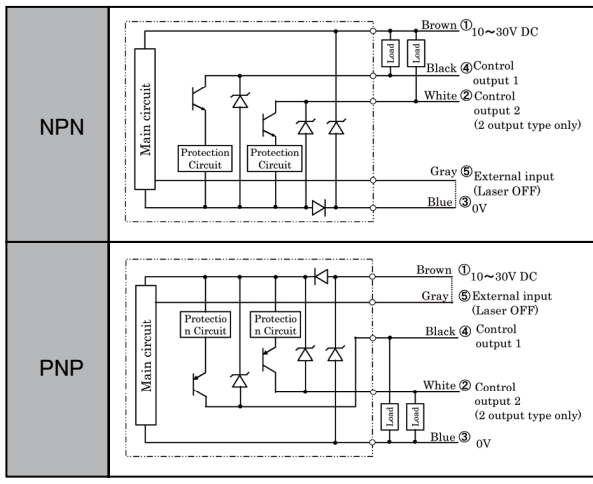

M12 Connector type

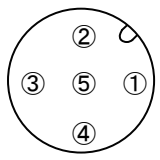

Pin No.

① DC10～30V
② Control output 2 (2 output type only)
③ 0V
④ Control output 1
⑤ External input (Laser OFF)

This way only

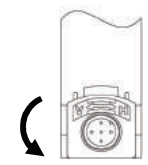

Horizontal→Vertical

- Connectors are inter-changeable between horizontal and vertical mode. Make sure to turn the connector as shown, otherwise you will damage the connector.

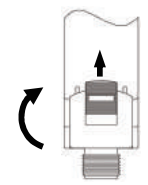

Vertical→Horizontal

- Set up the stopper to fix the connector.

Adjuster and Selector

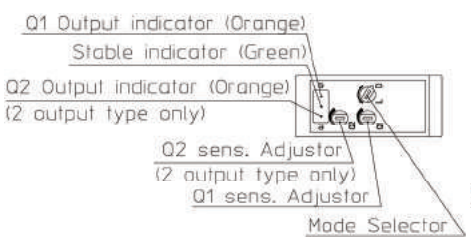

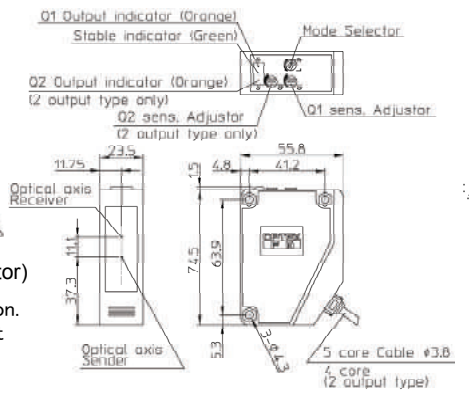

• Adjusting the sensitivity adjustor (sens. Adjustor)

1.Set the detectable object at the detection position. Turn the sens.adjustor to the left until the output indicator (orange) is extinguished.
＊Sens. adjustor
Diffused Reflection type ・・・4 turns volume
Retro Reflection type ・・・12 turns volume
2.Turn the sens.adjustor to the right until the output indicator (orange) and stable indicator (green) light up.
＊2 output type have two sens.adjustors and individual setting is passible.

• Selecting the mode selector

Selecting of Light ON / Dark ON is possible by mode selector.
Light ON (L) ・・・ON by sensing light
Dark ON (D) ・・・ON by blocking light
＊Mode selector is set "Light ON" in default state.

DIMENSIONS (Unit : mm)

Floor Installation

Wall Installation

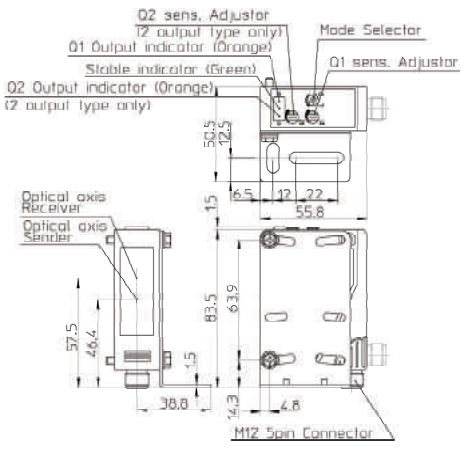

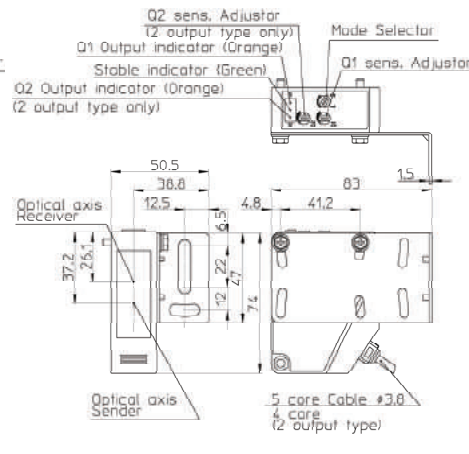

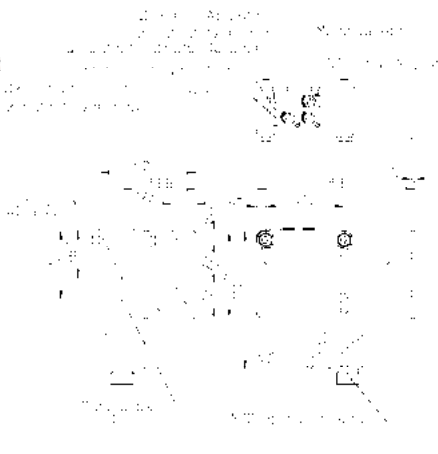

Precautions for using laser

This product is classified as Class 1(Ⅰ) Laser Product by JIS C6802 / IEC Laser Safety Standard.

CLASS 1
LASER PRODUCT

Accessories

Standard reflection mirror Type V-61
(for Retro Reflection type)

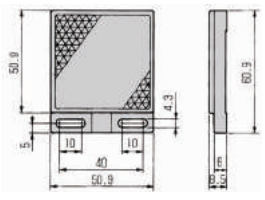

- Specifications and equipment are subject to change without any obligations on the part of manufacture.
- For more information, questions and comments regarding products, please contact us the right note.

Manufactured and sold by:
OPTEX FA CO.,LTD.
600-8815 Kyoto, Shimogyo, Awata Chudoji 91, Japan
TEL.+81-(0)75-325-2920
FAX.+81-(0)75-325-2921
Website : http://www.optex-fa.com