MODEL A58SE ETHERNET ABSOLUTE ENCODER

FEATURES

EtherCAT Deterministic Communication: CoE, FoE, EoE
58 mm Diameter Package
Shaft unit with 2 mounting options
Durable Magnetic Technology
Multi-Turn Absolute Encoder (16 Bit ST /43 Bit MT)
Proven Turns Counting Technology, No Gears or Batteries
Two color LEDs for operating condition and bus status
Meets CE/EMC Standards for Immunity and Emissions
Works in various configurations, including daisy-chaining, and redundant-ring configurations

COMMON APPLICATIONS

Robotics, Telescopes, Antennas, Medical Scanners, Wind Turbines, Elevators, Lifts, Motors, Automatic Guided Vehicles, Rotary and X/Y Positioning Tables

EPC Absolute Encoder – now with EtherCAT connectivity

The Model A58SE is an EtherCAT-ready, multi-turn absolute encoder designed for harsh factory and plant environments. It is particularly suited to applications where Ethernet-based connectivity is required, and the encoder must retain position information after power-off events. Easily designed into a wide variety of system applications, the A58SE plugs directly into your network with minimal provisioning for rapid deployment, facilitating data exchange among myriad networked devices. The Model A58SE retains absolute position information even after a power loss, facilitating speedy system recovery at start-up without the need for system re-homing.

Ready for Industry 4.0 and for the Industrial Internet of Things (IIoT), data exchange between the Model A58SE and other applications has no influence on the control loop. The Model A58SE is non-reactive and can work independently from the PLC or master, transferring data through network gateways to other automation networks and sites, and up to the cloud for analysis.

MODEL A58SE ORDERING GUIDE

Blue type indicates price adder options.

Mechanical | Electrical

A58SE – 06 MH – 16 00 EC U B V4 – RNB

MODEL
A58SE Absolute Series

SHAFT SIZE
06 6 mm[1]
08 8 mm[1]
10 10 mm[2]
59 0.375", 3/8"[1]

MOUNTING TYPE
MH Clamping Flange
MK Synchro Flange

SINGLE TURN RESOLUTION
01 to 16 Bit

MULTI-TURN RESOLUTION
00 Single Turn
01 - 43 Bit

COMM PROTOCOL
EC EtherCAT

SOFTWARE REV
U Revison U

OUTPUT CODE
B Binary

VOLTAGE
V4 10V - 32V

CONNECTOR TYPE[3]
RNB RNB Bus Cover with 3xM12

NOTES:
1 Available with IP65 seal only.
2 Available with IP67 seal only.
3 For mating connectors, cables, and cordsets see **Accessories** at encoder.com.

EtherCAT (Ethernet for Control and Automation Technology) is a registered trademark and patented technology, licensed by Beckhoff Automation GmbH, Germany.

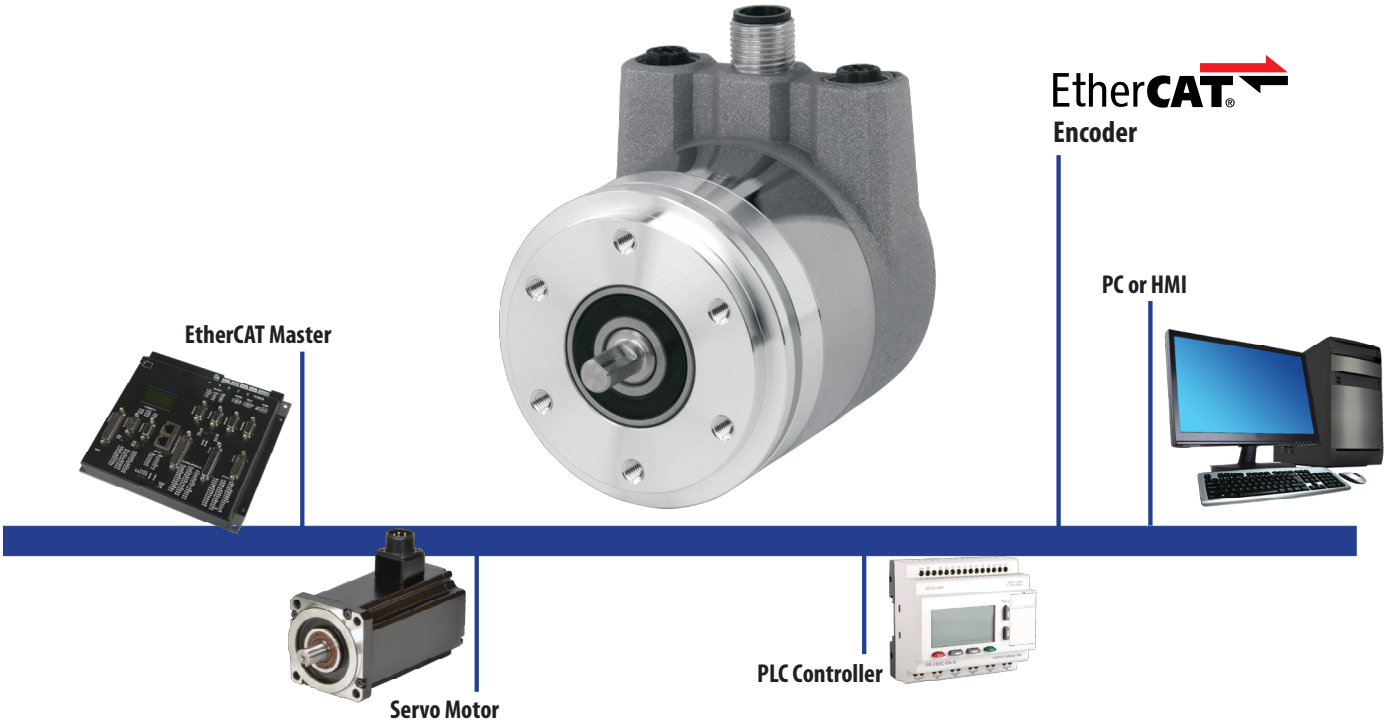

MODEL A58SE SPECIFICATIONS

Electrical

Power Supply ..... 10 VDC up to 32 VDC
Current Consumption..... typ. 125 mA
Power Consumption..... typ. 3 W

Sensor Specification

Internal Cycle Time .. 50 µs
Resolution
- Single Turn ..... up to 65,536 steps/360° (16 bit)
- Multi-Turn ..... 43 bit

Accuracy
- Single Turn ..... ± 0.0878° (≤ 12 bit)
- Single Turn, Repeat Accuracy..... ± 0.0878° (≤ 12 bit)

Technology
- Single Turn ..... Innovative Hall-sensor technology
- Multi-Turn ..... Patented energy-harvesting technology, no battery and no gears

Turn on time ..... < 1.5 s

Interface

Interface..... Industrial Ethernet
Protocol..... EtherCAT
Device Profile ..... CiA DS-406 V4.0.2, Class 3
Data Transfer..... 100BASE-TX
Cycle time..... up to 50 µs
Code ..... Binary, CW default, programmable
Programmable Parameter ..... Steps per revolution; counts of revolution; preset; scale; counting direction; 2x 8 cam switches; DC-Mode
Diagnostic LED ..... Traffic and connection management: L/A1: Port 1 (IN) L/A2: Port 2 (OUT)
Status LED ..... STAT, MOD: status of encoder and bus

Mechanical

Flange..... Synchro or Clamping
Flange Material ..... Aluminum
Shaft Material ..... Stainless steel
Shaft Length ..... 17 mm
Insertion depth
- min ..... 10 mm
- max ..... 19 mm

Housing Cap ..... Steel case chrome-plated, magnetic shielding
Connection Cover .... Die cast aluminum, powder coated
Weight..... 16 oz / 450 g approx
Shaft Rotation ..... Bi-directional
Max Radial Shaft Load ..... 125 N (28.1 lb) for 6 mm and 8 mm shafts
220 N (49.4 lb) for 10 mm shaft
220 N (49.4 lb) for 3/8" shaft
Max Axial Shaft Load..... 120 N (26.9 lb) for 6 mm, 8 mm and 10 mm shafts
120 N (26.9 lb) for 3/8" shaft
Starting Torque ..... Approximately 1 Ncm (1.416 oz-in) at ambient temperature.
Max Shaft Speed..... 6000 RPM

Bearings

Type..... 2 precision ball bearings
Nominal Service Life ..... 1×10^9 revs. at 100% rated shaft load
1×10^{10} revs. at 40% rated shaft load
1×10^{11} revs. at 20% rated shaft load

Environmental

Operating Temp ..... -40° to 85° C
Storage Temp ..... -40° to 100° C
Sealing..... IP65 (IP67 on 10 mm shaft) tested per EN 60529
ESD ..... 8 kV tested per EN 61000-4-2
Burst ..... 2 kV tested per 61000-4-4
EMC..... EN 61000-6-2; EN 61000-6-3
Vibration..... 200 m/s^2 (10 Hz up to 1000 Hz) (20.3 g [10Hz up to 1000 Hz]) tested per EN 60068-2-6
Shock..... 5000 m/s^2 (6 ms) 509.8 g (6 ms) tested per EN 60068-2-27
Design..... According DIN VDE 0160

MODEL A58SE ETHERNET ABSOLUTE ENCODER

MODEL A58SE CLAMPING FLANGE (MH)

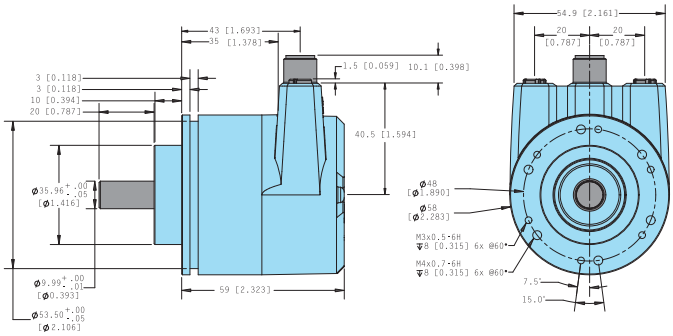

MODEL A58SE SYNCHRO FLANGE (MK)

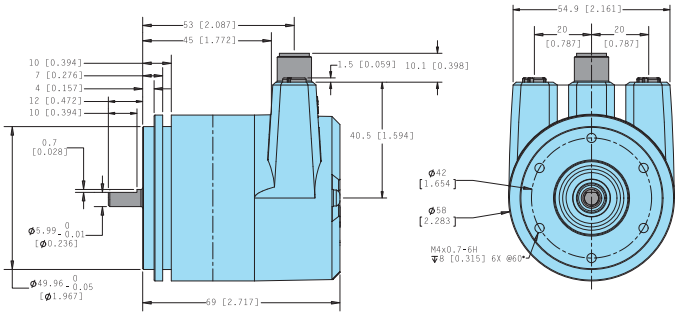

Primary dimensions are in mm, secondary dimensions SI units [inches] in brackets for reference only..

NETWORK BUS CONNECTOR PINOUT

Bus cover with 3x M12x1

For EPC-supplied mating cables, wiring table is provided with cable. Trim back and insulate unused wires.

Port 1 (In)

Assignments

RNB

Female Connector (Port1) IN	M12x1, 4-pin, D-coded
Tx+	1
Rx+	2
Tx-	3
Rx-	4

Power

Assignments

RNB

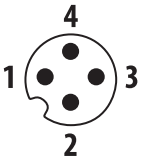

Connector (Power)	M12x1, 4-pin, A-coded
(+) Vcc	1
n. c.	2
GND	3
n. c.	4

Port 2 (Out)

Assignments

RNB

Female Connector (Port2) OUT	M12x1, 4-pin, D-coded
Tx+	1
Rx+	2
Tx-	3
Rx-	4

MATING CABLES/CORDSETS

DC Power Cable A-Code		Signal Cable D-Code, M12 4-Pin to RJ-45		Signal Cable D-Code, M12 4-Pin to M12 4-Pin	
Stock #	**Length**	**Stock #**	**Length**	**Stock #**	**Length**
075241	2 m	**075245**	2 m	**075249**	2 m
075242	5 m	**075246**	5 m	**075250**	5 m
075243	10 m	**075247**	10 m	**075251**	10 m
075244	20 m	**075248**	20 m	**075252**	20 m